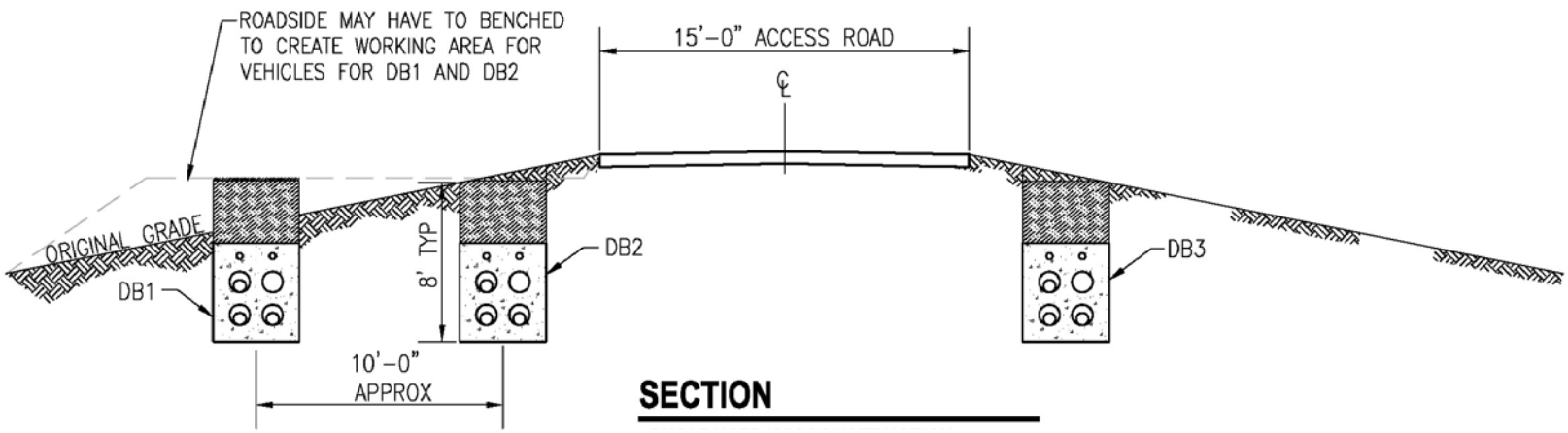

SECTION

500-kV Ductbank Installation Along USFS Access Road (3 Ductbanks Shown)

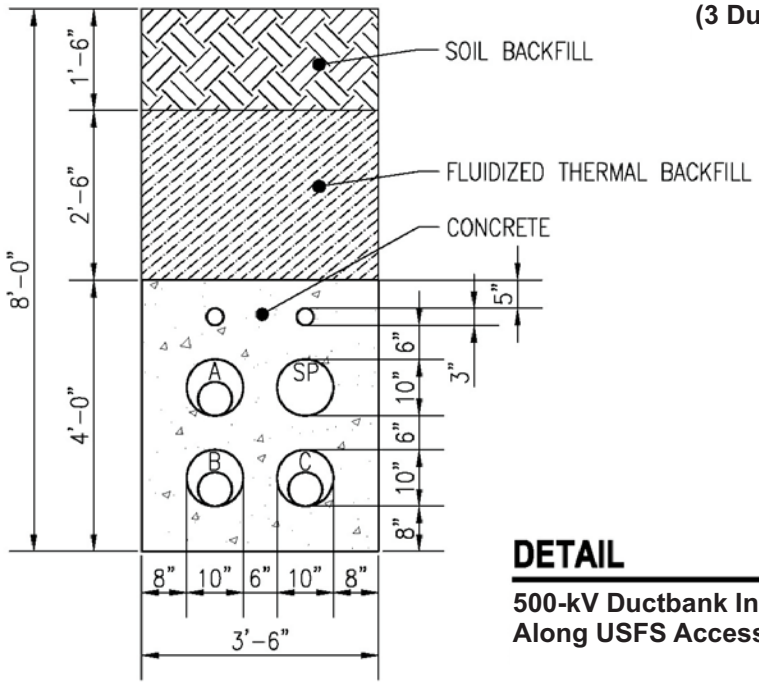

DETAIL

500-kV Ductbank Installation Along USFS Access Road

Source: RW Beck, 2005

PREPARED BY Aspen Environmental Group

Figure B.4-4

Underground Transmission Cross-section in the ANF