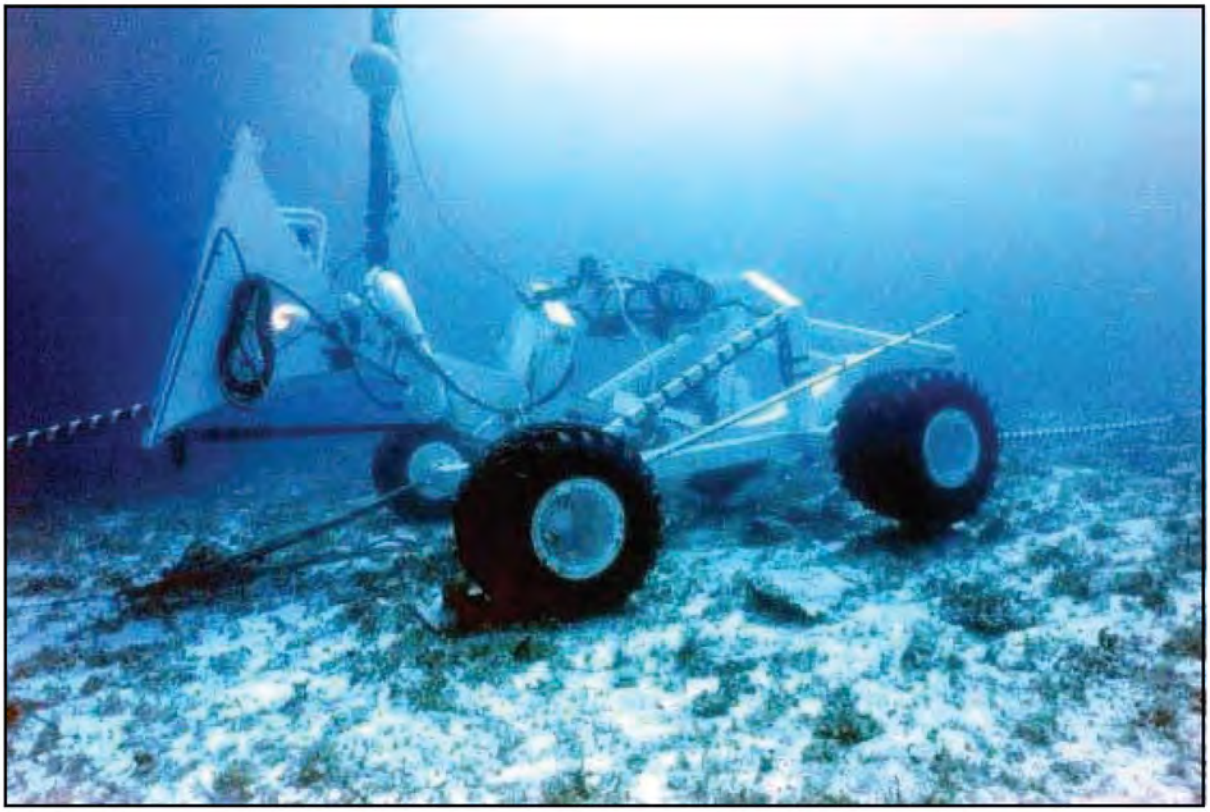

Actual hydroplow used in Trans Bay Cable project.

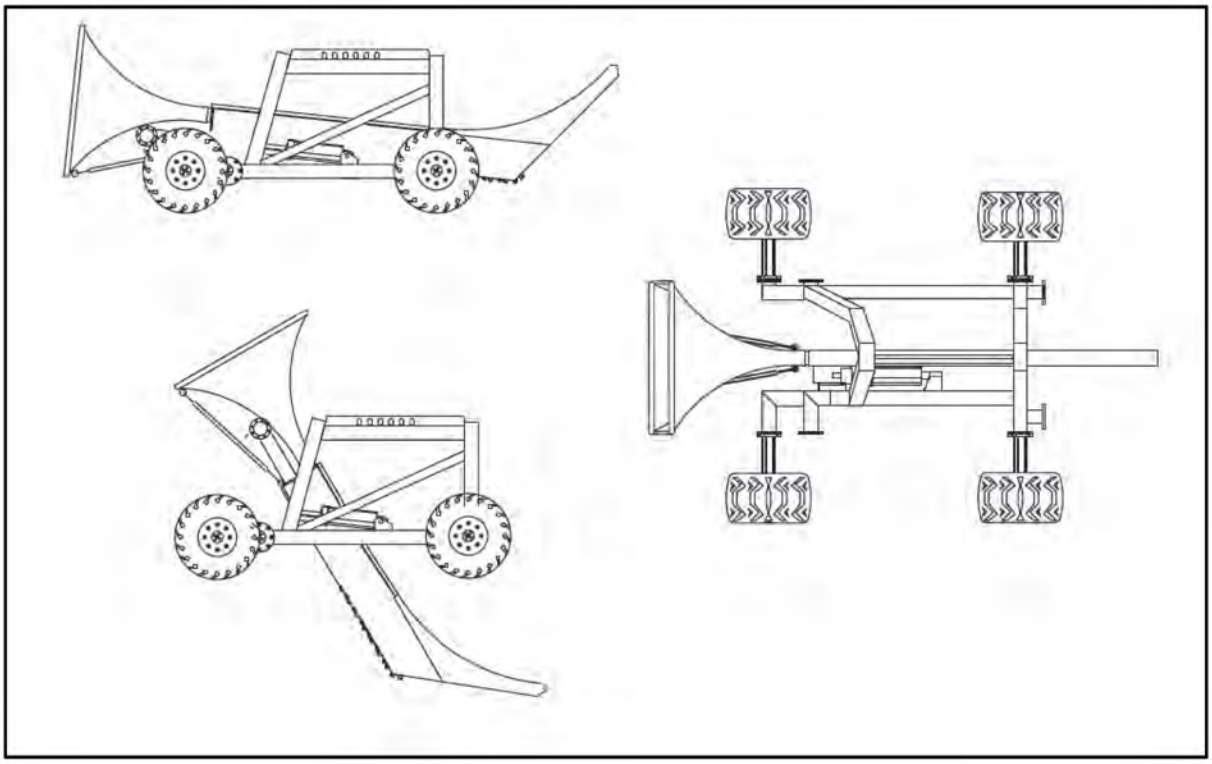

Source: PG&E, 2012.

Figure 4-17
Hydroplow