SOUTHERN CALIFORNIA EDISON

An *EDISON INTERNATIONAL* Company

RENEWABLE POWER PURCHASE AND SALE AGREEMENT

between

SOUTHERN CALIFORNIA EDISON COMPANY

and

ADERA SOLAR, LLC

(RAP ID # 5781)

The contents of this document are subject to restrictions on disclosure as set forth herein.

TABLE OF CONTENTS

PREAMBLE AND RECITALS 1

ARTICLE ONE. SPECIAL CONDITIONS 2
1.01 Generating Facility. 2
1.02 Forecasted Initial Synchronization Date. 3
1.03 Forecasted Commercial Operation Date. 3
1.04 Commercial Operation Deadline. 3
1.05 Term. 5
1.06 Product Price. 5
1.07 Performance Assurance Amount. 5
1.08 Interconnection Queue Position. 7
1.09 Curtailment Cap. 7
1.10 Federal Tax Credit. 7
1.11 Compliance Expenditure Cap. 7

ARTICLE TWO. TERM AND CONDITIONS PRECEDENT; TERMINATION 9
2.01 Effective Date and Obligations prior to Effective Date. 9
2.02 Obligations Prior to Commencement of the Term. 9
2.03 Conditions Precedent to Commencement of Term. 10
2.04 Termination Rights. 10
2.05 Rights and Obligations Surviving Termination. 11

ARTICLE THREE. SELLER'S OBLIGATIONS 14
3.01 Conveyance of Entire Output, Conveyance of Green Attributes, Capacity Attributes and Resource Adequacy Benefits. 14
3.02 [Intentionally Omitted]. 15
3.03 Other Sales of Product. 15
3.04 Allocation of Availability Incentive Payments and Non-Availability Charges. 15
3.05 Permits, Interconnection and Transmission Service Agreements, and CAISO Tariff Compliance. 15
3.06 Development Security. 16
3.07 Seller's Energy Delivery Obligation. 20
3.08 Metering, Communications, Telemetry and Meteorological Station(s). 21
3.09 Site Location and Control. 24
3.10 Change in Structure, Ownership or Financing. 25
3.11 Design. 25
3.12 Operation and Record Keeping. 25
3.13 Obtaining Scheduling Coordinator Services. 27
3.14 Forecasting. 28
3.15 Scheduled Outages. 28
3.16 Progress Reporting Toward Meeting Milestone Schedule. 29
3.17 Provision of Information. 29
3.18 SCE's Access Rights. 31

3.19 [Intentionally Omitted]. 31
3.20 Obtaining and Maintaining CEC Certification, and CEC Verification. 31
3.21 Notice of Cessation or Termination of Service Agreements. 31
3.22 Payments and Invoicing. 31
3.23 Lost Output Report. 32
3.24 Actual Availability Report. 32
3.25 [Intentionally Omitted]. 33
3.26 Seller's Provision of Historic Solar Data. 33
3.27 [Intentionally Omitted]. 33
3.28 NERC Electric System Reliability Standards. 33
3.29 Application of Prevailing Wage. 34

ARTICLE FOUR. SCE'S OBLIGATIONS 35
4.01 Obligation to Pay and Invoice. 35
4.02 Obligations Under MRTU or Equivalent Successor Market. 35
4.03 SCE's Check Meter. 37
4.04 Scheduling Coordinator. 38
4.05 Termination of Scheduling Coordinator. 38
4.06 Exclusive Rights to Product and Cost Responsibility. 38
4.07 Interest Payments on Cash Deposits. 39

ARTICLE FIVE. FORCE MAJEURE 40
5.01 No Default for Force Majeure. 40
5.02 Requirements Applicable to the Claiming Party. 40
5.03 Commercial Operation Deadline Extension. 40
5.04 Termination. 41

ARTICLE SIX. EVENTS OF DEFAULT; REMEDIES 42
6.01 Events of Default. 42
6.02 Early Termination. 45
6.03 Termination Payment. 45

ARTICLE SEVEN. LIMITATIONS OF LIABILITIES 46

ARTICLE EIGHT. CREDIT AND COLLATERAL REQUIREMENTS 48
8.01 Financial Information. 48
8.02 Development Security and Performance Assurance. 48
8.03 First Priority Security Interest in Cash or Cash Equivalent Collateral. 51
8.04 Credit and Collateral Covenants. 51
8.05 Commercial Code Waiver. 52

ARTICLE NINE. GOVERNMENTAL CHARGES 54
9.01 Cooperation to Minimize Tax Liabilities. 54
9.02 Governmental Charges. 54
9.03 Providing Information to Taxing Authorities. 54

ARTICLE TEN. MISCELLANEOUS 55
10.01 Representations and Warranties. 55

10.02 Additional Seller Representations, Warranties and Covenants. 55
10.03 Indemnity. 57
10.04 Assignment. 59
10.05 Consent to Collateral Assignment. 59
10.06 Abandonment. 61
10.07 Governing Law. 61
10.08 Notices. 62
10.09 General. 62
10.10 Confidentiality. 64
10.11 Insurance. 67
10.12 Nondedication. 69
10.13 Mobile Sierra. 69
10.14 Simple Interest Payments. 70
10.15 Payments. 70
10.16 Seller Ownership and Control of Generating Facility. 70
10.17 Required Material. 70

ARTICLE ELEVEN. CHANGE IN ELECTRIC MARKET DESIGN 71

ARTICLE TWELVE. MEDIATION AND ARBITRATION 72
12.01 Dispute Resolution. 72
12.02 Mediation. 72
12.03 Arbitration. 73
12.04 Provisional Relief. 75

SIGNATURES.....76

LIST OF EXHIBITS

A. Definitions.

B. Generating Facility and Site Description.

C. Notice List.

D. Forecasting and Scheduling Requirements and Procedures.

E. Payments and Invoicing.

F. Product Replacement Damage Amount.

G. Seller's Milestone Schedule and Material Permits.

H. Milestone Progress Reporting Form.

I. Non-Disclosure Agreement.

J. Time of Delivery Periods and Product Payment Allocation Factors.

K. Procedure for Demonstration of Contract Capacity and Partial or Full Return of Development Security.

L. Seller's Estimate of Lost Output.

M. Form of Letter of Credit.

N. SCE Penalties and CAISO Sanctions.

O. Actual Availability Report.

P. Meteorological Station Specifications.

Q. Notice of SCE's Rights.

RENEWABLE POWER PURCHASE AND SALE AGREEMENT

between

SOUTHERN CALIFORNIA EDISON COMPANY

and

ADERA SOLAR, LLC

(RAP ID # 5781)

PREAMBLE

This Renewable Power Purchase and Sale Agreement, together with the exhibits and attachments (collectively, the "Agreement") is made and effective as of the following date: September 30, 2013 ("Effective Date").

This Agreement is entered into between:

(i) **Southern California Edison Company** ("SCE"), a California corporation, whose principal place of business is at 2244 Walnut Grove Avenue, Rosemead, California 91770, and

(ii) **Adera Solar, LLC** ("Seller"), a Delaware limited liability company, whose principal place of business is at 115 West Canon Perdido Street, Santa Barbara, CA 93101.

SCE and Seller are sometimes referred to herein individually as a "Party" and jointly as the "Parties." Unless the context otherwise specifies or requires, capitalized terms in this Agreement have the meanings set forth in Exhibit A.

RECITALS

A. Seller is willing to construct, own, and Operate a Generating Facility which qualifies as of the Effective Date as an ERR, and to sell the Product to SCE pursuant to the terms and conditions set forth in this Agreement; and

B. SCE is willing to purchase the Product from Seller pursuant to the terms and conditions set forth in this Agreement.

ARTICLE ONE. SPECIAL CONDITIONS

1.01 Generating Facility.

(a) Name: Chowchilla Solar Project.

(b) Location of Site: Intersection of Avenue 25 and Road 12, Chowchilla, CA 93610, as further described in Exhibit B.

(c) Description: As set forth in Exhibit B.

(d) Product: All electric energy produced by the Generating Facility throughout the Delivery Term, net of Station Use; all Green Attributes; all Capacity Attributes, if any; and all Resource Adequacy Benefits, if any; generated by, associated with or attributable to the Generating Facility throughout the Delivery Term.

(e) Interconnection Point: Le Grand-Dairyland 115kV Line.

(f) Delivery Point: At the point of interconnection with the CAISO-Controlled Grid, Pole 006/010 Le Grand-Dairyland 115kV Line.

(g) ERR Type: Solar Photovoltaic (PV).

(h) Contract Capacity: 20 MW.

The Contract Capacity may be reduced as set forth in Section 3.06(g).

(i) Expected Annual Net Energy Production.

The Expected Annual Net Energy Production for each Term Year will be the value calculated in accordance with the following formula:

EXPECTED ANNUAL NET ENERGY PRODUCTION, in kWh

= A x B x C

Where:

A = The Installed DC Rating, in kW_{PDC}. (As of the Effective Date and until SCE's verification of Seller's installation of the Generating Facility pursuant to Exhibit K, this rating is deemed to be 26,502 $kW_{PDC.)}$.

B = Annual Energy Yield Factor 1,660 kWh AC per kW_{PDC} per year.

C = Annual degradation factor ("Annual Degradation Factor") in each Term Year as follows:

Term Year	Annual Degradation Factor
1	1.0000
2	0.9960
3	0.9920
4	0.9880
5	0.9841
6	0.9802
7	0.9762
8	0.9723
9	0.9684
10	0.9646
11	0.9607
12	0.9569
13	0.9530
14	0.9492
15	0.9454
16	0.9417
17	0.9379
18	0.9341
19	0.9304
20	0.9267

1.02 Forecasted Initial Synchronization Date.

The Forecasted Initial Synchronization Date is March 1, 2015.

1.03 Forecasted Commercial Operation Date.

The Forecasted Commercial Operation Date is April 15, 2015.

1.04 Commercial Operation Deadline.

(a) Subject to any extensions made pursuant to Sections 1.04(b), 1.04(c), 3.06(c) or 5.03, and further subject to Section 1.04(d), the Commercial Operation Date must be no later than the earlier of (i) one hundred twenty (120) days from the Initial Synchronization Date, and (ii) twenty-four (24) months from the date of CPUC Approval ("Commercial Operation Deadline").

(b) Subject to Section 1.04(e), if (i) all of the interconnection facilities, transmission upgrades and new transmission facilities, if any, described in Seller's interconnection agreement and required to interconnect the Generating Facility to the CAISO Controlled Grid have not been completed and placed into operation by the CAISO or the Transmission Provider on the estimated completion date set forth in Seller's interconnection agreement, and (ii) the estimated completion date set forth in Seller's interconnection agreement is within twenty-four (24) months from the date of CPUC Approval, then, upon SCE's receipt of Notice from Seller, which Notice must be provided at least sixty (60) days before the date that is twenty-four (24) months from the date of CPUC Approval, the Commercial Operation Deadline shall be extended six (6) months from the date that is twenty-four (24) months from the date of CPUC Approval; *provided*, *however*, such extension shall not be given if the failure to meet the estimated completion date set forth in Seller's interconnection agreement was as a result of Seller's failure to complete its obligations, take all actions and meet all of its deadlines under Seller's interconnection agreement needed to ensure timely completion and operation of such interconnection facilities, transmission upgrades and new transmission facilities.

(c) Subject to Section 1.04(e), if Seller has not obtained Permit Approval on or before that date that is ninety (90) days before the date that is twenty-four (24) months from the date of CPUC Approval, then, upon SCE's receipt of Notice from Seller, which Notice must be provided at least sixty (60) days before the date that is twenty-four (24) months from the date of CPUC Approval, the Commercial Operation Deadline shall be extended six (6) months from the date that is twenty-four (24) months from the date of CPUC Approval; *provided*, *however*, such extension shall not be given if the failure to obtain Permit Approval was as a result of Seller's failure to take all commercially reasonable actions to apply for and meet all of its requirements and deadlines to obtain such Permit Approval.

(d) Notwithstanding anything in this Agreement to the contrary, the Commercial Operation Deadline may not be later than thirty (30) months from the date of CPUC Approval.

(e) Upon request from SCE, Seller shall provide documentation demonstrating to SCE's reasonable satisfaction that the delays described in Section 1.04(b) or 1.04(c) (as applicable), did not result from Seller's action or failure to take action as described in Section 1.04(b) or 1.04(c) (as applicable).

1.05 Term.

The Term commences on the Commercial Operation Date determined in accordance with Section 2.03 and ends on the later of:

(a) the last day of the calendar month two hundred and forty (240) months (twenty (20) years) from the month of the Commercial Operation Date (the "Original Term"); or

(b) If SCE provides Notice to Seller no later than nineteen (19) years after the Commercial Operation Date that Seller is obligated to deliver to SCE at the Delivery Point the quantity of Product that is two (2) times the quantity of Banked Curtailed Energy as of the last day of the Original Term ("Curtailed Return Term Notice"), then the Term ends on the earlier of:

(i) the day on which Seller has delivered to SCE at the Delivery Point the quantity of Product that is two (2) times the quantity of the Banked Curtailed Energy; or

(ii) two (2) years after the last day of the Original Term

(the period set forth in Section 1.05(b)(i) or this Section 1.05(b)(ii) is referred to as the "Curtailed Return Term").

1.06 Product Price.

(a) Original Term: During the Original Term, the Product Price is Seventy Dollars and Thirty Five Cents ($70.35) per MWh,.

(b) Curtailed Return Term: During the Curtailed Return Term, the Product Price shall be fifty percent (50%) of the Product Price set forth in Section 1.06(a).

(c) Excess Deliveries.

(i) If during any Settlement Interval Seller delivers Metered Amounts in excess of one hundred ten percent (110%) of the Contract Capacity, then the Product Price applicable to all such excess MWh in such Settlement Interval shall be Zero dollars ($0).

(ii) If during any TOD Period on any day Seller delivers Metered Amounts in excess of one hundred ten percent (110%) of the Contract Capacity, then the Product Price applicable to all such excess MWh in such TOD Period for such day, shall be Zero dollars ($0).

(iii) If during any Term Year Seller delivers Metered Amounts in excess of one hundred fifteen percent (115%) of the Expected Annual Net Energy Production for such Term Year, then the Product Price applicable to all such excess MWh in such Term Year shall be equal to seventy-five percent (75%) of the Product Price otherwise applicable under Section 1.06(a) (or Section 1.06(b), if applicable).

1.07 Performance Assurance Amount.

Commencing with the Commercial Operation Date and for every Term Year during the Term, Seller shall post and maintain Performance Assurance in a dollar amount as shown on the chart below, but not less than One Million dollars ($1,000,000) for any Term Year. For purposes of the chart below, the first Term Year covers the period from the Commercial Operation Date to and including the end of the first Term Year.

Term Year	**Performance Assurance Amount**
	20 Year Term
1	1,855,000
2	1,855,000
3	3,091,000
4	3,091,000
5	3,091,000
6	3,709,000
7	3,709,000
8	3,709,000
9	3,709,000
10	3,709,000
11	3,709,000
12	3,709,000
13	3,709,000
14	3,709,000
15	3,709,000
16	3,091,000
17	3,091,000
18	1,855,000
19	1,855,000

20	1,855,000
Curtailed Return Term	1,855,000

1.08 Interconnection Queue Position.

644

1.09 Curtailment Cap.

1000 MWh per Term Year.

1.10 Federal Tax Credit.

For purposes of this Agreement, Seller (check one box only):

(a) ___X____ qualifies for and will take the Federal Investment Tax Credit.

(b) _____ qualifies for and will take the Federal Production Tax Credit, and has selected to be eligible for Federal Production Tax Credit reimbursement under Section 4.02.

(c) _____ qualifies for and will take the Federal Production Tax Credit, but has selected to not be eligible for Federal Production Tax Credit reimbursement under Section 4.02.

(d) _____ will not take a Federal Tax Credit.

Notwithstanding any election pursuant to this Section 1.10, Seller may take any federal tax credit available to it; *provided*, any provisions in this Agreement related to any federal tax credits shall relate solely to the federal tax credit elected pursuant to this Section 1.10 and shall not be updated or modified in the event that Seller takes a federal tax credit other than that elected pursuant to this Section 1.10.

1.11 Compliance Expenditure Cap.

If Seller establishes to SCE's reasonable satisfaction that a change in Applicable Laws occurring after the Effective Date has increased Seller's cost above the cost that could reasonably have been contemplated as of the Effective Date to take all actions to comply with Seller's obligations under the Agreement with respect to obtaining, conveying or effectuating SCE's use of (as applicable), the items listed in Sections 1.11(a) through (d), then Seller's required out-of-pocket expenses are limited to One Hundred Thousand dollars ($100,000) in the aggregate each Term Year ("Compliance Expenditure Cap") between the Effective Date and the last day of the Term:

(a) Obtaining and maintaining CEC Pre-Certification or CEC Certification and Verification;

(b) Green Attributes;

(c) Capacity Attributes; and

(d) Resource Adequacy Benefits.

Any actions required for Seller to comply with its obligations set forth in the first paragraph above, the cost of which will be included in the Compliance Expenditure Cap, shall be referred to collectively as the "Compliance Actions."

If Seller reasonably anticipates the need to incur out-of-pocket expenses in excess of the Compliance Expenditure Cap in order to take any Compliance Action Seller shall provide Notice to SCE of such anticipated out-of-pocket expenses.

SCE will have sixty (60) days to evaluate such Notice (during which time period Seller is not obligated to take any Compliance Actions described in the Notice) and shall, within such time, either (1) agree to reimburse Seller for all or some portion of the costs that exceed the Compliance Expenditure Cap (such SCE-agreed upon costs, the "Accepted Compliance Costs"), or (2) waive Seller's obligation to take such Compliance Actions, or any part thereof for which SCE has not agreed to reimburse Seller.

If SCE agrees to reimburse Seller for the Accepted Compliance Costs, then Seller shall take such Compliance Actions covered by the Accepted Compliance Costs as agreed upon by the Parties and SCE shall reimburse Seller for Seller's actual costs to effect the Compliance Actions, not to exceed the Accepted Compliance Costs.

**** End of ARTICLE ONE ****

ARTICLE TWO. TERM AND CONDITIONS PRECEDENT; TERMINATION

2.01 Effective Date and Obligations prior to Effective Date.

(a) This Agreement becomes effective on the Effective Date.

(b) Upon the execution and delivery of this Agreement, each Party acknowledges receipt of the following items to its satisfaction:

(i) Signing authority consisting of evidence of authority, incumbency and specimen signature of each person executing the Agreement or any other document on its behalf in connection with the Agreement; and

(ii) Certified copies of resolutions of the Board of Directors, or of its relevant committees, showing that the Party is authorized to execute and deliver this Agreement and to perform its obligations under the Agreement.

2.02 Obligations Prior to Commencement of the Term.

(a) CPUC Filing and Approval of this Agreement.

Within ninety (90) days after the Effective Date, SCE shall file with the CPUC the appropriate request for CPUC Approval. SCE shall expeditiously seek CPUC Approval, including promptly responding to any requests for information related to the request for CPUC Approval. As requested by SCE, Seller shall use commercially reasonable efforts to support SCE in obtaining CPUC Approval. SCE has no obligation to seek rehearing or to appeal a CPUC decision which fails to approve this Agreement or which contains findings required for CPUC Approval with conditions or modifications unacceptable to either Party.

(b) Interconnection Queue Position.

Seller must not withdraw the Interconnection Queue Position identified in Section 1.08 or assign or transfer that Interconnection Queue Position to any entity or for the benefit of any power purchase and sale agreement other than the Agreement without SCE's prior written consent.

(c) Seller's Regulatory and Governmental Filings.

(i) Within one hundred eighty (180) days after the Effective Date, Seller shall file an application or other appropriate request for CEC Pre-Certification for the Generating Facility.

(ii) Within Three Hundred Sixty (360) days after the Effective Date, Seller shall file all applications or other appropriate requests with the proper authorities for Construction Permits.

(iii) Seller shall expeditiously seek CEC Pre-Certification and all Material Permits, including promptly responding to any requests for information from the requesting authority.

(iv) Within thirty (30) days after the Commercial Operation Date, Seller shall file an application or other appropriate request with the CEC for CEC Certification for the Generating Facility.

(v) Seller shall expeditiously seek CEC Certification and maintain CEC Verification, including promptly responding to any requests for information from the requesting authority.

2.03 Conditions Precedent to Commencement of Term.

(a) Commencement of Term.

The Term commences upon the Commercial Operation Date.

(b) Commercial Operation.

(i) Subject to the remainder of this subsection 2.03(b), the Commercial Operation Date shall be a date selected by Seller upon at least three (3) Business Days Notice to SCE.

(ii) The Commercial Operation Date may not occur until each of the following has been satisfied:

(1) Seller shall have obtained Material Permits as set forth in Section 2.02(c)(iii);

(2) Seller has completed the installation and testing of the Generating Facility for purposes of financing, Permits, the interconnection agreement, operating agreements, the EPC agreement and manufacturer's warranties;

(3) Seller has received an independent engineer's certification that the Generating Facility has been completed in all material respects (except punch list items that do not materially and adversely affect the ability of the Generating Facility to operate as intended);

(4) Seller has met all conditions set forth in Section 3.12(c); and

(5) Seller shall have posted with SCE the Performance Assurance required under Section 8.02 calculated in accordance with Section 1.07.

2.04 Termination Rights.

(a) Termination Rights of the Parties.

If either Party exercises a termination right, as set forth in Sections 2.04(a)(i) or 5.04, a Termination Payment will be calculated in accordance with

Section 6.03, the Forward Settlement Amount will be Zero dollars ($0), the terminating Party will be considered the Non-Defaulting Party and, if the termination occurs before the commencement of the Term, Seller will be entitled to a return of any Development Security provided to SCE.

(i) Termination Rights of Both Parties.

(1) Either Party has the right to terminate this Agreement on Notice, which will be effective five (5) Business Days after such Notice is given, if CPUC Approval has not been obtained or waived by SCE in its sole discretion within one hundred eighty (180) days after SCE files its request for CPUC Approval and a Notice of termination is given on or before the two hundred tenth (210th) day after SCE files the request for CPUC Approval.

(2) Either Party has the right to terminate this Agreement on Notice, which will be effective five (5) Business Days after such Notice is given, if CEC Pre-Certification has not been obtained by Seller within twelve (12) months after the Effective Date and a Notice of termination is given on or before the end of the thirteenth (13th) month after the Effective Date.

(3) Either Party has the right to terminate this Agreement on Notice, which will be effective five (5) Business Days after such Notice is given, if Seller has not obtained Permit Approval of the Construction Permits within Twenty Two (22) months after the Effective Date and a Notice of termination is given on or before the end of the twenty third (23rd) month after the Effective Date.

(ii) [Intentionally Omitted].

(b) Uncured Defaults.

Upon the occurrence of an Event of Default, the Non-Defaulting Party may terminate this Agreement as set forth in Section 6.02.

(c) End of Term.

This Agreement automatically terminates at the end of the Term as set forth in Section 1.05 unless earlier terminated as provided in this Agreement.

2.05 Rights and Obligations Surviving Termination.

(a) Survival of Rights and Obligations Generally.

The rights and obligations that are intended to survive a termination of this Agreement are all of those rights and obligations that this Agreement

expressly provides survive any such termination and those that arise from Seller's or SCE's covenants, agreements, representations, and warranties applicable to, or to be performed, at or during any time before or as a result of the termination of this Agreement, including:

(i) The obligation of Seller to pay the Product Replacement Damage Amount as set forth in Section 3.07(b);

(ii) The obligation to make, or the right to receive, a Termination Payment as set forth in Section 6.03;

(iii) The indemnity obligations as set forth in Section 10.03;

(iv) The obligation of confidentiality as set forth in Section 10.10;

(v) The right to pursue remedies as set forth in Sections 6.02 and 12.04;

(vi) The limitation of liabilities as set forth in Article Seven;

(vii) A Party's obligation:

(1) To make or receive payment, as applicable, for CAISO Revenues and make payment for CAISO Costs, CAISO Sanctions, and SCE Penalties, as applicable, during the Startup Period and the Term as set forth in Article Four, Exhibits E and Q; and

(2) To make or receive Product Payments as set forth in Exhibit E;

(viii) The covenants and indemnifications regarding the limitations on Seller's and Seller's Affiliates' ability to offer, make or agree to third party sales as set forth in Sections 2.05(b) and 3.06(h), if applicable;

(ix) The obligation of Seller to pay to SCE the Development Security if SCE terminates this Agreement in accordance with Section 6.02 prior to Commercial Operation;

(x) The obligation of Seller to post Performance Assurance as set forth in Section 8.02;

(xi) The dispute resolution provisions of Article Twelve;

(xii) The obligation of SCE to return any Development Security under Section 3.06 and Performance Assurance under Section 8.02, as applicable; and

(xiii) Seller's obligations under Section 3.01(d)(iv).

(b) <u>Limitations on Seller's and Seller's Affiliates' Ability to Make or Agree to Third Party Sales from the Site after Certain Terminations of this Agreement</u>.

If Seller terminates this Agreement, as provided in Sections 2.04(a)(i)(2), 2.04(a)(i)(3), or 5.04 (based on a Force Majeure as to which Seller is the

Claiming Party), or if SCE terminates this Agreement as provided in Section 3.06(d), or due to an Event of Default of Seller prior to Commercial Operation Deadline, neither Seller nor Seller's Affiliates may sell, or enter into a contract to sell, electric energy, Green Attributes, Capacity Attributes, or Resource Adequacy Benefits, generated by, associated with or attributable to a generating facility installed at the Site to a party other than SCE for a period of two (2) years following the effective date of such termination (the "Restricted Period").

This prohibition on contracting and sale will not apply if, before entering into such contract or making a sale to a party other than SCE, Seller or Seller's Affiliate provides SCE with a written offer to sell the electric energy, Green Attributes, Capacity Attributes and Resource Adequacy Benefits to SCE at the Product Price and on other terms and conditions materially similar to the terms and conditions contained in this Agreement and SCE fails to accept such offer within forty-five (45) days after SCE's receipt thereof.

Neither Seller nor Seller's Affiliates may sell or transfer the Generating Facility, or any part thereof, or land rights or interests in the Site (including the Interconnection Queue Position) during the Restricted Period so long as the limitations contained in this Section 2.05(b) apply, unless the transferee agrees to be bound by the terms set forth in this Section 2.05(b) pursuant to a written agreement approved by SCE. Upon termination of this Agreement pursuant to the Sections referenced in the first paragraph of this Section 2.05(b), Seller shall deliver a Notice of SCE's Rights in respect of the Site, in the form attached hereto as Exhibit Q, that SCE may record giving notice of SCE's rights under this Section 2.05(b).

Seller shall indemnify and hold SCE harmless from all benefits lost and other damages sustained by SCE as a result of any breach of the covenants contained within this Section 2.05(b).

**** End of ARTICLE TWO ****

ARTICLE THREE. SELLER'S OBLIGATIONS

3.01 Conveyance of Entire Output, Conveyance of Green Attributes, Capacity Attributes and Resource Adequacy Benefits.

(a) Metered Amounts. Seller shall dedicate and convey the *entire* Metered Amounts throughout the Delivery Term to SCE. Seller shall convey title to and risk of loss of all Metered Amounts to SCE at the Delivery Point.

(b) Green Attributes. Seller hereby provides and conveys all Green Attributes associated with all electricity generation from the Project to Buyer as part of the Product being delivered. Seller represents and warrants that Seller holds the rights to all Green Attributes from the Project, and Seller agrees to convey and hereby conveys all such Green Attributes to Buyer as included in the delivery of the Product from the Project.

(c) Capacity Attributes and Resource Adequacy Benefits. Subject to Section 1.11, Seller shall dedicate and convey any and all Capacity Attributes and Resource Adequacy Benefits, if any, generated by, associated with or attributable to the Generating Facility throughout the Delivery Term to SCE and SCE shall be given sole title to all such Capacity Attributes and Resource Adequacy Benefits in order for SCE to meet its resource adequacy obligations under any Resource Adequacy Rulings.

Seller represents, warrants and covenants to SCE that Seller:

(i) Has not used, granted, pledged, assigned or otherwise committed any portion of the generating capacity of the Generating Facility to meet the resource adequacy requirements of, or to confer Resource Adequacy Benefits on, any entity other than SCE; and

(ii) Throughout the Delivery Term, will not use, grant, pledge, assign or otherwise commit any portion of the generating capacity of the Generating Facility to meet the resource adequacy requirements of, or to confer Resource Adequacy Benefits on, any entity other than SCE.

(d) Further Action by Seller. Subject to Section 1.11, commencing at least six (6) months before the Initial Synchronization Date and throughout the Delivery Term, Seller shall, at its own cost, take all actions and execute all documents or instruments necessary to effectuate the use of the Green Attributes, Capacity Attributes and Resource Adequacy Benefits, if any, for SCE's sole benefit throughout the Delivery Term, which actions include:

(i) Cooperating with and encouraging the regional entity responsible for resource adequacy administration to certify or qualify the Contract Capacity for resource adequacy purposes, if applicable;

(ii) Testing the Generating Facility in order to certify the Generating Facility for resource adequacy purposes, if applicable;

(iii) Complying with all current and future CAISO Tariff provisions that address resource adequacy and are applicable to the Generating Facility, including provisions regarding performance obligations and penalties, if applicable;

(iv) Complying with Applicable Laws regarding the certification and transfer of Renewable Energy Credits, including participation in the Western Renewable Energy Generation Information System ("WREGIS") or other process recognized under Applicable Laws for the registration, transfer or ownership of Green Attributes associated with the Generating Facility. With respect to WREGIS, Seller shall cause and allow SCE to be the "Qualified Reporting Entity" and "Account Holder" (as these two terms are defined by WREGIS) for the Generating Facility;

(v) Committing to SCE the entire Metered Amounts from the Generating Facility; and

(vi) Pursuing and obtaining any and all Capacity Attributes and Resource Adequacy Benefits to the extent that Applicable Laws, including as may be changed after the Effective Date, allow for any Capacity Attributes or Resource Adequacy Benefits to be obtained other than by the completion of the Deliverability Network Upgrades identified in the Seller's interconnection agreement.

(e) Other Sales of Product. From the Effective Date throughout the Delivery Term, Seller shall not sell the Product (or any portion thereof) to any entity other than SCE.

3.02 [Intentionally Omitted].

3.03 Other Sales of Product.

From the Effective Date throughout the Delivery Term, Seller shall not sell the Product (or any portion thereof) to any entity other than SCE.

3.04 Allocation of Availability Incentive Payments and Non-Availability Charges.

If the Generating Facility is subject to the terms of the Availability Standards, Non-Availability Charges, and Availability Incentive Payments as contemplated under Section 40.9 of the CAISO Tariff, any Availability Incentive Payments will be for the benefit of Seller and for Seller's account and any Non-Availability Charges will be the responsibility of Seller and for Seller's account.

3.05 Permits, Interconnection and Transmission Service Agreements, and CAISO Tariff Compliance.

(a) Seller shall obtain and maintain throughout the Delivery Term any and all interconnection and transmission service rights and Permits required to effect delivery of the electric energy from the Generating Facility to the Delivery Point.

(b) Seller shall be responsible for all costs and charges directly caused by, associated with, or allocated to the interconnection of the Generating Facility to the Transmission Provider's electric system and transmission of electric energy from the Generating Facility to the Transmission Provider's electric system.

(c) Seller shall comply with the CAISO Tariff, including securing and maintaining in full force all required CAISO agreements, certifications and approvals.

(d) Seller shall secure through the CAISO the CAISO Resource ID that is to be used solely for this Generating Facility.

(e) Seller shall comply with the requirements of Appendix H to Appendix CC of the CAISO Tariff.

3.06 Development Security.

(a) Amount.

Seller shall post and thereafter maintain development security ("Development Security") equal to Sixty dollars ($60) for each kilowatt of Contract Capacity.

(b) Posting Requirements.

Seller shall post the Development Security in accordance with the following terms and conditions:

(i) Seller shall post one-half of the Development Security within thirty (30) days following the Effective Date, with the remainder to be posted within thirty (30) days after CPUC Approval is obtained or waived by SCE in its sole discretion;

(ii) The Development Security shall be held by SCE as security for Seller achieving Commercial Operation on or before the Commercial Operation Deadline and demonstrating the Contract Capacity in accordance with the terms of this Agreement.

(iii) The Development Security must be in the form of either a cash deposit or a Letter of Credit;

(iv) If Seller posts any Development Security in cash, Seller will receive Simple Interest Payments in accordance with the procedure specified in Section 4.07 of this Agreement; and

(v) If Seller establishes the Development Security by means of a Letter of Credit, such Letter of Credit must be provided substantially in the form of Exhibit M.

(c) Daily Delay Liquidated Damages to Extend Commercial Operation Deadline.

Seller may extend the Commercial Operation Deadline by paying to SCE damages in an amount equal to one percent (1%) of the Development Security per day for each day (or portion thereof) from and including the Commercial Operation Deadline to and excluding the Commercial Operation Date ("Daily Delay Liquidated Damages").

To extend the Commercial Operation Deadline, Seller must, at the earliest possible time, but no later than 6 a.m. on the first day of the proposed Commercial Operation Deadline extension, provide SCE with Notice of its election to extend the Commercial Operation Deadline along with Seller's estimate of the duration of the extension and its payment of Daily Delay Liquidated Damages for the full estimated Commercial Operation Deadline extension period.

Seller may further extend the Commercial Operation Deadline beyond the original Commercial Operation Deadline extension period subject to the same terms applicable to the original Commercial Operation Deadline extension.

The Daily Delay Liquidated Damages payments applicable to days included in any Commercial Operation Deadline extension are nonrefundable and are in addition to, and not a part of, the Development Security.

Seller will be entitled to a refund (without interest) of any estimated Daily Delay Liquidated Damages payments paid by Seller which exceed the amount required to cover the number of days by which the Commercial Operation Deadline was actually extended.

In no event may Seller extend the Commercial Operation Deadline for more than a total of one hundred eighty (180) days by the payment of Daily Delay Liquidated Damages.

(d) Failure to Meet Commercial Operation Deadline.

Subject to Seller's right to extend the Commercial Operation Deadline as provided in Section 1.04, Section 3.06(c), and Section 5.03 (for Force Majeure where Seller is the Claiming Party), in the event that (i) Seller and SCE mutually agree that Commercial Operation will not occur on or before the Commercial Operation Deadline; (ii) the Commercial Operation Date will not occur due to any termination of this Agreement as a result of an Event of Default by Seller occurring on or before the Commercial Operation Deadline; or (iii) Seller abandons the Generating Facility, SCE shall be entitled to:

(A) The entire Development Security, including the right to draw on and retain for its sole benefit any Letter of Credit and the proceeds thereof, as well as any cash, posted as Development Security; and

(B) Terminate this Agreement;

provided, SCE shall give Notice to Seller of any determination under Section 3.06(d)(iii) that the Commercial Operation Date is unlikely to occur on or before the Commercial Operation Deadline, and if within thirty (30) days from the date of such Notice Seller can establish to SCE's reasonable satisfaction that Seller has not abandoned the Generating Facility and that the Commercial Operation Date is likely to occur on or before the Commercial Operation Deadline, SCE may not terminate the Agreement prior to the Commercial Operation Deadline or retain the Development Security at that time, but shall retain all other rights under this Agreement, including the right to terminate the Agreement and retain the entire Development Security if the Commercial Operation Date does not occur on or before the Commercial Operation Deadline in accordance with clause (i) of the first paragraph of this Section 3.06(d).

If SCE terminates this Agreement pursuant to this Section 3.06(d), any amount of Development Security that Seller has not yet posted with SCE will be immediately due and payable by Seller to SCE.

In addition, subject to Section 2.05(b), if SCE terminates this Agreement pursuant to this Section 3.06(d), neither Party shall have liability for damages for failure to deliver or purchase Product after the effective date of such termination, with the Forward Settlement Amount being Zero dollars ($0).

(e) Full Return of Development Security.

The Development Security will be returned to Seller in accordance with the procedure set forth in Exhibit K in each of the following circumstances:

(i) Subject to the Commercial Operation Date occurring on or before the Commercial Operation Deadline or any extended Commercial Operation Deadline as provided in this Agreement, if Seller demonstrates the full Contract Capacity specified in Section 1.01(h) in accordance with the procedure set forth in Exhibit K; or

(ii) If this Agreement is terminated in accordance with Section 2.04(a)(i) or 5.04; *provided*, a termination under Section 5.04 only entitles Seller to a return of the Development Security if the termination is based on a Force Majeure that prevents the Commercial Operation Date from occurring on or before the Commercial Operation Deadline or prevents Seller from demonstrating full Contract Capacity in accordance with Exhibit K.

(f) Partial Return of the Development Security.

If Commercial Operation occurs on or before the Commercial Operation Deadline, but the Demonstrated Contract Capacity is less than the Contract Capacity set forth in Section 1.01(h), then Seller will be entitled to a return of only a portion of the Development Security equal to the product of Sixty dollars ($60) per kilowatt times the kilowatts of Demonstrated Contract Capacity.

(g) Modification of Special Conditions.

(i) If the Contract Capacity set forth in Section 1.01(h) is greater than the Demonstrated Contract Capacity,

(1) The Contract Capacity will be reduced to an amount equal to the Demonstrated Contract Capacity;

(2) The Expected Annual Net Energy Production will be recalculated using the Installed DC Rating pursuant to the procedures in Exhibit K; and

(3) The Performance Assurance Amount for the Performance Assurance required to be posted and maintained pursuant to Section 8.02 will be recalculated using such adjusted Contract Capacity, and any amount of Performance Assurance in excess of that required for the adjusted Contract Capacity will be returned to Seller.

(ii) Neither Party will have any liability for failure to purchase or deliver Product associated with or attributable to capacity in excess of the Demonstrated Contract Capacity ("Unincluded Capacity"), subject to Section 3.06(h).

(h) Restrictions on Sales Related to Unincluded Capacity.

(i) Neither Seller nor Seller's Affiliates may sell, or enter into an agreement to sell, electric energy, Green Attributes, Capacity Attributes or Resource Adequacy Benefits associated with or attributable to Unincluded Capacity from any generating facility installed at the Site to a party other than SCE for a period of two (2) years following SCE's Notice to Seller of Seller's partial forfeiture of the Development Security pursuant to Exhibit K.

(ii) With respect to Seller's Affiliates, the prohibition on contracting and sale as set forth in Section 3.06(h)(i) will not apply if, before entering into the contract or making a sale to a party other than SCE, any Seller's Affiliate wishing to enter into a contract or sale provides SCE with a written offer to sell the electric energy, Green Attributes, Capacity Attributes and Resource Adequacy Benefits related to Unincluded Capacity to SCE on terms and conditions materially similar to or no less favorable to SCE than the terms and conditions

contained in this Agreement and SCE fails to accept such offer within forty-five (45) days after SCE's receipt thereof; *provided*, any Seller's Affiliate wishing to enter into a contract or sale must:

(1) Build a new generating facility separate from the Generating Facility to produce such additional electric energy and associated attributes;

(2) Establish an entity other than Seller to act as the seller for such additional electric energy and associated attributes;

(3) Meter such additional generating capacity separately from the Generating Facility, to SCE's reasonable satisfaction; and

(4) Separately interconnect such additional generating capacity to the Transmission Provider's system, to SCE's reasonable satisfaction.

If the preceding conditions are met, Seller's Affiliates (but not Seller) will be free to sell such additional electric energy and associated attributes to third parties.

3.07 Seller's Energy Delivery Obligation.

On the commencement of the first Term Year and for every Term Year thereafter, Seller is subject to the electric energy delivery requirements and damages for failure to perform as set forth in this Section 3.07.

(a) Performance Requirements.

(i) Seller's Energy Delivery Obligation.

"Seller's Energy Delivery Obligation" for the twenty-four (24) month period immediately preceding the end of each Term Year commencing at the end of the second Term Year ("Calculation Period") must equal one hundred sixty percent (160%) of the Expected Annual Net Energy Production.

(ii) Event of Deficient Energy Deliveries.

At the end of each Term Year commencing with the end of the second Term Year, if the sum of Qualified Amounts plus any Lost Output (calculated in accordance with Exhibit L) in the applicable Calculation Period does not equal or exceed Seller's Energy Delivery Obligation, then an Event of Deficient Energy Deliveries will be deemed to have occurred.

(b) Product Replacement Damage Amount.

If an Event of Deficient Energy Deliveries occurs, as determined in accordance with Section 3.07(a)(ii) above, the Parties acknowledge that the damages sustained by SCE associated with Seller's failure to meet Seller's

Energy Delivery Obligation would be difficult or impossible to determine, or that obtaining an adequate remedy would be unreasonably time consuming or expensive, and therefore agree that Seller shall pay SCE as liquidated damages an amount which is intended to compensate SCE for Seller's failure to perform, irrespective of whether SCE actually purchased replacement Product by reason of Seller's failure to perform (the "Product Replacement Damage Amount").

(i) Within ninety (90) days after the end of the applicable Term Year, SCE shall calculate any Product Replacement Damage Amount as set forth in Exhibit F, and shall provide Notice to Seller of any Product Replacement Damage Amount owing, including a detailed explanation of, and rationale for, its calculation methodology, annotated work papers and source data.

(ii) Seller shall have thirty (30) days after receipt of SCE's Notice to review SCE's calculation and either pay the entire Product Replacement Damage Amount claimed by SCE or pay any undisputed portion and provide Notice to SCE of the portion Seller disputes along with a detailed explanation of, and rationale for, Seller's calculation methodology, annotated work papers and source data.

(iii) The Parties shall negotiate in good faith to resolve any disputed portion of the Product Replacement Damage Amount and shall, as part of such good faith negotiations, promptly provide information or data relevant to the dispute as each Party may possess which is requested by the other Party.

(iv) If the Parties are unable to resolve a dispute regarding any Product Replacement Damage Amount within thirty (30) days after the sending of a Notice of dispute by Seller, either Party may submit the dispute to mediation and arbitration as provided in Article Twelve.

(c) Continuing Obligations of Seller.

Notwithstanding any payment of a Product Replacement Damage Amount, all of Seller's obligations under Sections 3.01 and 3.02 continue to apply.

3.08 Metering, Communications, Telemetry and Meteorological Station(s).

(a) CAISO Approved Meter.

Seller shall, at its own cost, install, maintain and test all CAISO Approved Meters pursuant to the CAISO Tariff.

(b) Check Meter.

Seller will permit SCE to furnish and install one Check Meter on the high voltage side of the step-up transformer, substation, or any other location at SCE's sole discretion, associated with the Generating Facility in compliance

with the applicable utility electric service requirements. Each Check Meter must be interconnected with SCE's communication network to permit:

(i) Periodic, remote collection of revenue quality meter data; and

(ii) Back-up real time transmission of operating-quality meter data.

(c) SCE's Access to Meters.

(i) Subject to Section 3.18, Seller hereby grants SCE reasonable access to all CAISO Approved Meters and Check Meters for meter readings and any purpose necessary to effectuate this Agreement.

(ii) Seller shall promptly provide SCE access to all meter data and data acquisition services both in real-time, and at later times, as SCE may reasonably request.

(iii) Prior to Initial Synchronization, Seller shall provide instructions to the CAISO granting authorizations or other documentation sufficient to provide SCE with access to the CAISO Approved Meter and to Seller's settlement data on OMAR.

(d) CAISO Approved Meter Maintenance.

(i) Seller shall test and calibrate the CAISO Approved Meter, as necessary, but in no event will the period between testing and calibration dates be greater than twelve (12) months.

(ii) Seller shall bear its own costs for any meter check or recertification of the CAISO Approved Meter.

(iii) Seller shall replace the CAISO Approved Meter battery at least once every thirty-six (36) months or such shorter period as may be recommended by the CAISO Approved Meter manufacturer.

Notwithstanding the foregoing, if the CAISO Approved Meter battery fails, Seller shall replace such battery within one (1) day after becoming aware of its failure.

(iv) Seller shall use certified test and calibration technicians to perform any work associated with the CAISO Approved Meter.

(v) Seller shall inform SCE of test and calibration dates, provide SCE with access to observe and witness such testing and calibration, and provide SCE certified results of tests and calibrations within thirty (30) days after completion.

(e) SCADA and Telemetry System.

All communication, metering, telemetry, and associated generation operation equipment will be centralized into the Generating Facility's SCADA. Seller shall configure the SCADA so that SCE may access it via the GMS from the

GOC. Seller shall link the systems via an approved SCE communication network, utilizing existing industry standard network protocol, as approved by SCE. The connection will be bidirectional in nature and used by the Parties to exchange all data points to and from the GOC. Seller shall be responsible for the costs of installing, configuring, maintaining and operating the SCADA and internal site links for the Generating Facility.

Seller shall be responsible for designing, furnishing, installing, operating, maintaining and testing a real time Telemetry System capable of interconnecting to the GMS, the CAISO-Approved Meter(s) and the Generating Facility's control system with the CAISO's Energy Communication Network.

The Telemetry System shall be designed in accordance with the CAISO monitoring and communication requirements and must be capable of:

(i) Reporting data from each CAISO-Approved Meter;

(ii) Providing the status of key control points from the Generating Facility's control system;

(iii) Routing generating unit set points to the Generating Facility's control system; and

(iv) Communicating availability of the Generating Facility pursuant to Section 3.08(g).

The Telemetry System must include a data processing gateway, internet connection, interconnecting cabling and all service agreements required for accessing the CAISO's Energy Communications Network.

The above mentioned connections and data transfer must be included in the systems engineering tasks as a part of the construction of the Generating Facility, and must be fully functional before Initial Synchronization.

(f) Meteorological Station(s) and Reporting Requirements.

Seller, at its own expense, shall install and maintain one (1) or more stand-alone meteorological stations at the Generating Facility in accordance with Exhibit P to monitor and report weather data to both the CAISO and the existing SCE weather station data collection system.

The station(s) must be installed at least sixty (60) days before Initial Synchronization.

The station(s) must be equipped with the Meteorological Equipment, as may be modified by Seller at SCE's direction from time to time to reflect the CAISO's PIRP/EIRP protocol and the requirements of Exhibit L.

The station(s) must be designed to collect and record data in accordance with CAISO's PIRP/EIRP protocols and the requirements of Exhibit L.

Data reports must be formatted in a manner consistent with the CAISO requirements published on the CAISO internet website.

Telemetering equipment must be designed to function in accordance with CAISO's PIRP/EIRP protocols.

The station(s) must be equipped to measure and record the minimum data required by the CAISO, in the manner specified by the CAISO.

Seller shall submit to SCE for review and approval, Seller's technical specifications for the meteorological station(s) along with a site plan showing the location of the station(s), the location of all Photovoltaic Modules, Current Inverters, and other prominent features, as applicable.

(g) Real-Time Communication of Availability.

(i) Prior to Initial Synchronization, Seller shall install a telecommunication system and demonstrate to SCE's reasonable satisfaction that the system interfaces with the Web Client and the GMS to provide SCE with Seller's Real-Time Availability.

(ii) Seller shall maintain the telecommunications path, the hardware, and software to provide quality data to SCE throughout the Delivery Term.

(iii) Upon Notice from SCE, Seller shall repair or have corrected as soon as possible, but no later than five (5) days after receipt of such Notice any:

(1) Inoperable telecommunications path;

(2) Inoperable software; or

(3) Faulty instrumentation.

(iv) Seller shall submit an Actual Availability Report pursuant to Section 3.24 for any month in which Seller's telecommunications system was not available or did not provide quality data for longer than twenty-four (24) continuous hours.

3.09 Site Location and Control.

(a) This Agreement is Site specific as set forth in Section 1.01(b). Seller may change the location of the Site only upon SCE's prior written consent, which consent is in SCE's sole discretion.

(b) Seller shall have Site Control throughout the Delivery Term.

(c) Seller shall provide SCE with prompt Notice of any change in the status of Seller's Site Control.

(d) Seller shall provide SCE with Notice of the status of its Site Control before commencing construction of the Generating Facility.

3.10 Change in Structure, Ownership or Financing.

Seller shall provide Notice to SCE within five (5) Business Days after a change in the status of any of the following:

(a) Seller's exact and complete name, form of organization, direct or indirect ownership and state of incorporation or organization, or address of Seller's principal place of business; and

(b) Seller's construction-period financing and Operating-period financing, including the sources of equity investments and debt financings.

No Notice provided pursuant to this Section 3.10 constitutes or substitutes for any consent required pursuant to Sections 10.04 or 10.05.

3.11 Design.

At no cost to SCE, Seller shall be responsible for:

(a) Designing and constructing the Generating Facility;

(b) Using commercially reasonable efforts to acquire all Permits;

(c) Providing to SCE, at least thirty (30) days before the anticipated Initial Synchronization Date, the following Generating Facility information:

(i) Site plan drawings for the Generating Facility;

(ii) Electrical one-line diagrams;

(iii) Control and data-acquisition details and configuration documents;

(iv) Major electrical equipment specifications;

(v) General arrangement drawings;

(vi) Longitude and latitude of the centroid of the Site;

(vii) Artist renderings of the Site, if any;

(viii) Aerial photographs of the Site, if any;

(ix) Current Inverter specification;

(x) Photovoltaic Module specification; and

(xi) Map showing the location of the Meteorological Equipment, including specifying the longitude and latitude of such.

(d) Providing SCE advance Notice at the earliest practicable time of any proposed material changes in the Generating Facility, but in no event less than thirty (30) days before the changes are to be made, which Notice must include the information set forth in Section 3.11(c), along with all specifications and drawings pertaining to any such changes and any changes to Exhibit B.

3.12 Operation and Record Keeping.

(a) Seller shall Operate the Generating Facility in accordance with Prudent Electrical Practices.

(b) Seller shall comply with Operating orders in compliance with the CAISO Tariff.

(c) On or prior to Initial Synchronization:

(i) SCE shall have obtained or waived CPUC Approval;

(ii) Seller shall obtain CEC Pre-Certification;

(iii) Seller shall take all steps necessary to ensure that SCE becomes authorized by the CAISO to Schedule the electric energy produced by the Generating Facility with the CAISO;

(iv) SCE shall have been authorized by the CAISO to Schedule the electric energy produced by the Generating Facility with the CAISO;

(v) Seller shall demonstrate to SCE's reasonable satisfaction that Seller has executed all necessary Transmission Provider and CAISO agreements;

(vi) Seller shall provide to SCE the DLF used by the Transmission Provider in the administration of the transmission service agreement for the Generating Facility;

(vii) Seller shall be Forecasting to SCE in accordance with Exhibit D;

(viii) Seller shall commence delivering electric energy to SCE at the Delivery Point;

(ix) Seller shall have installed and placed in operation all equipment and systems required under Section 3.08;

(x) Seller shall have registered with the NERC as the Generating Facility's Generator Owner and Generator Operator if Seller is required to be a registered entity pursuant to the NERC Reliability Standards; and

(xi) Seller shall have furnished to SCE all insurance documents required under Section 10.11.

(d) Seller shall keep a daily operations log for the Generating Facility that shall include the following information:

(i) Availability of the Inverter Block Units and associated Current Inverters;

(ii) Circuit breaker trip operations;

(iii) Any significant events related to the Operation of the Generating Facility;

(iv) Real and reactive power and energy production;

(v) Changes in Operating status;

(vi) Protective apparatus operations;

(vii) Any unusual conditions found during inspections;

(viii) Electric energy production, fuel consumption and efficiency (if applicable); and

(ix) Status and settings of generator controls including automatic voltage regulator and power system stabilizer.

(e) Seller shall maintain complete records of the Generating Facility's plane of array insolation, other pertinent meteorological conditions and operational status of each Inverter Block Unit.

(f) Seller shall keep a maintenance log for the Generating Facility that shall include information on maintenance (both breakdown and preventative) performed, outages, inspections, manufacturer recommended services and replacement, electrical characteristics of the generators, control settings or adjustments of equipment and protective devices.

Seller shall maintain documentation of all procedures applicable to the testing and maintenance of the Generating Facility protective devices as necessary to comply with NERC Reliability Standards applicable to protection systems for large electric generators, if Seller is required to be a registered entity pursuant to the NERC Reliability Standards.

Such information in Section 3.12(d), 3.12(e) and 3.12(f) above shall be provided or made available to SCE within twenty (20) days after any Notice.

(g) Seller shall promptly curtail the production of the Generating Facility:

(i) Upon Notice from SCE that Seller has been instructed by the CAISO or Transmission Provider to curtail energy deliveries;

(ii) Upon Notice that Seller has been given a curtailment order or similar instruction in order to respond to an Emergency;

(iii) If no Schedule was awarded in either the Day-Ahead Market or the Real-Time Market; or

(iv) If SCE issues an OSGC Order or RTOSGC Order.

(h) Information maintained pursuant to this Section 3.12 shall be kept by Seller throughout the Delivery Term and shall be provided or made available to SCE within twenty (20) days after any Notice.

(i) Seller must be interfaced with SCE's Generation Management System and be responsive to 5-minute Dispatch Instruction and other applicable CAISO Tariff rules.

3.13 Obtaining Scheduling Coordinator Services.

Seller shall comply with all applicable CAISO Tariff procedures, protocol, rules and testing as necessary for SCE to submit Bids for the electric energy produced by the Generating Facility.

(a) Designating SCE as Scheduling Coordinator.

(i) At least thirty (30) days before Initial Synchronization, Seller shall take all actions and execute and deliver to SCE all documents necessary to authorize or designate SCE as the Scheduling Coordinator throughout the Delivery Term.

(ii) Throughout the Delivery Term, Seller shall not authorize or designate any other party to act as Scheduling Coordinator, nor shall Seller perform, for its own benefit, the duties of Scheduling Coordinator.

(b) Replacement of SCE as Scheduling Coordinator.

At least forty-five (45) days before the end of the Term, or as soon as practicable before the date of any termination of this Agreement before the end of the Term, Seller shall take all actions necessary to terminate the designation of SCE as Seller's Scheduling Coordinator as of hour ending 24:00 on the last day of the Term. These actions include the following:

(i) Seller shall submit to the CAISO a designation of a new Scheduling Coordinator for Seller to replace SCE;

(ii) Seller shall cause the newly designated Scheduling Coordinator to submit a letter to the CAISO accepting the designation; and

(iii) Seller shall inform SCE of the last date on which SCE will be Seller's Scheduling Coordinator. SCE must consent to any date other than the last day of the Term, such consent not to be unreasonably withheld.

3.14 Forecasting.

Seller shall Forecast in accordance with the provisions of Exhibit D.

Seller shall use commercially reasonable efforts to Operate the Generating Facility so that the available capacity or electric energy from the Generating Facility conforms with Forecasts provided in accordance with Exhibit D.

3.15 Scheduled Outages.

(a) Commencing at least sixty (60) days before Initial Synchronization and throughout the Delivery Term, Seller shall, no later than January 1, April 1, July 1 and October 1 of each year, submit to SCE, using the Web Client, Seller's schedule of proposed planned outages ("Outage Schedule") for the subsequent twenty-four month period.

(b) Seller shall provide the following information for each proposed planned outage:

(i) Start date and time;

(ii) End date and time; and

(iii) Capacity online, in MW, during the planned outage.

(c) Within thirty (30) days after SCE's receipt of an Outage Schedule, SCE shall notify Seller in writing of any reasonable request for changes to the Outage Schedule, and Seller shall, consistent with Prudent Electrical Practices, accommodate SCE's requests regarding the timing of any planned outage.

(d) Seller shall cooperate with SCE to arrange and coordinate all Outage Schedules with the CAISO.

(e) If a condition occurs at the Generating Facility which causes Seller to revise its planned outages, Seller shall promptly provide Notice to SCE, using the Web Client, of such change (including an estimate of the length of such planned outage) as required in the CAISO Tariff after the condition causing the change becomes known to Seller.

(f) Seller shall promptly prepare and provide to SCE upon request, using the Web Client, all reports of actual or forecasted outages that SCE may reasonably require for the purpose of enabling SCE to comply with Section 761.3 of the California Public Utilities Code or any Applicable Law mandating the reporting by investor owned utilities of expected or experienced outages by electric energy generating facilities under contract to supply electric energy.

3.16 Progress Reporting Toward Meeting Milestone Schedule.

Seller shall use commercially reasonable efforts to meet the Milestone Schedule and avoid or minimize any delays in meeting this schedule. Seller shall provide a monthly written report of its progress toward meeting the Milestone Schedule using the procedures set forth in Exhibit H.

Seller shall include in such report a list of all letters, notices, applications, approvals, authorizations, filings, permits and licenses relating to any Transmission Provider, Governmental Authority or the CAISO and shall provide any such documents as may be reasonably requested on Notice from SCE.

In addition, Seller shall advise SCE as soon as reasonably practicable of any problems or issues of which Seller is aware which may materially impact Seller's ability to meet the Milestone Schedule.

3.17 Provision of Information.

Seller shall promptly provide to SCE copies of:

(a) Within ten (10) Business Days of receipt thereof, copies of any Interconnection Study or the interconnection agreement tendered to Seller by the Transmission Provider and all amendments thereto;

(b) All applications and approvals or disapprovals relating to CEC Pre-Certification, CEC Certification, CEC Verification, any Permit and PIRP/EIRP (in the event SCE requests Seller to apply to be in PIRP/EIRP);

(c) All final and revised copies of material reports, studies and analyses furnished by the CAISO or any Transmission Provider, and any correspondence related thereto, concerning the interconnection of the Generating Facility to the Transmission Provider's electric system or the transmission of electric energy on the Transmission Provider's electric system;

(d) All notifications of adjustments in the DLF used by the Transmission Provider in the administration of the transmission service agreement for the Generating Facility within thirty (30) days of receiving such notification from the Transmission Provider;

(e) A copy of the IE Annual Energy Yield Factor Report and all Solar Resource Evaluation Reports, and any revisions thereto, for the time period beginning on the Effective Date and ending on the last day of the first Term Year;

(f) Any reports, studies, or assessments of the Generating Facility prepared for Seller by an independent engineer; and

(g) All Generating Facility and metering information as may be requested by SCE, including the following, at least thirty (30) days before Initial Synchronization:

For each CAISO Approved Meter:

(i) Generating Station/Unit ID;

(ii) CAISO Resource ID;

(iii) CAISO Approved Meter Device ID;

(iv) Password;

(v) Data path (network (ECN) or modem);

(vi) If modem, phone number;

(vii) Copy of meter certification;

(viii) List of any CAISO metering exemptions (if any); and

(ix) Description of any compensation calculations such as transformer losses and line losses.

For the Generating Facility:

(1) Utility transmission/distribution one-line diagram;

(2) Physical location, address or descriptive identification;

(3) Latitude and longitude of the centroid of the Site and all Meteorological Equipment;

(4) Telephone number on site;

(5) Telephone number of control room;

(6) Telephone number for operational issues; and

(7) Telephone number for administrative issues.

(h) [Intentionally Omitted].

(i) No later than twenty (20) days after each semi-annual period ending on June 30th or December 31st, a report listing all WMDVBEs that supplied goods or services to Seller during such period, including any certifications or other documentation of such WMDVBEs' status as such and the aggregate amount paid to WMDVBEs during such period.

(j) Internal Revenue Service tax Form W-9 and California tax Form 590 (or their equivalent), completed with Seller's information, and any other documentation necessary for SCE to comply with its tax reporting or withholding obligations with respect to Seller, within ten (10) Business Days of Seller's receipt of Notice from SCE requesting the same.

3.18 SCE's Access Rights.

Seller hereby grants SCE the right of ingress and egress to examine the Site and Generating Facility for any purpose reasonably connected with this Agreement or the exercise of any and all rights of SCE under Applicable Law or SCE's tariff schedules and rules on file with the CPUC. When at the Site, SCE, its authorized agents, employees and inspectors shall adhere to safety and security procedures as may reasonably be required by Seller; *provided*, Seller has provided such procedures to SCE in advance.

3.19 [Intentionally Omitted].

3.20 Obtaining and Maintaining CEC Certification, and CEC Verification.

Subject to Section 1.11, Seller shall take all necessary steps, including making or supporting timely filings with the CEC, to obtain and maintain CEC Pre-Certification and CEC Certification and CEC Verification throughout the Delivery Term.

3.21 Notice of Cessation or Termination of Service Agreements.

Seller shall provide Notice to SCE within one (1) Business Day after termination of, or cessation of service under, any agreement necessary to deliver Product to SCE at the Delivery Point or to meter the Metered Amounts.

3.22 Payments and Invoicing.

Throughout the Delivery Term, Seller shall issue Payment Invoices and pay SCE in accordance with Exhibit E.

3.23 Lost Output Report.

(a) Monthly Report; SCE Review.

Commencing on the Commercial Operation Date and continuing throughout the Term, Seller shall calculate Lost Output and prepare and provide to SCE a Lost Output Report by the tenth (10th) Business Day of each month in accordance with Exhibit L.

SCE will have thirty (30) days after receipt of Seller's monthly Lost Output Report or Supplemental Lost Output Report to review such report.

Upon SCE's request, Seller shall promptly provide to SCE any additional data and supporting documentation necessary for SCE to audit and verify any matters in the Lost Output Report.

(b) Disputes of Lost Output.

If SCE disputes Seller's Lost Output calculation, SCE shall provide Notice to Seller within thirty (30) days after receipt of Seller's Lost Output Report and include SCE's calculations and other data supporting its position.

The Parties shall negotiate in good faith to resolve any dispute.

If the Parties are unable to resolve a dispute within thirty (30) days after SCE's giving the dispute Notice, either Party may submit the dispute to mediation and arbitration as provided in Article Twelve.

Seller will have no right to claim any Lost Output for any month that was not identified in the original Lost Output Report for that month; *provided*, Seller may supplement the amount of Lost Output claimed ("Supplemental Lost Output") for the month with a supplemental Lost Output Report ("Supplemental Lost Output Report") if Seller can demonstrate that Seller neither knew nor could have known through the exercise of reasonable diligence about the Supplemental Lost Output within the foregoing thirty (30) day period and Seller provides the Supplemental Lost Output Report within ten (10) Business Days after learning the facts which provide the basis for the Supplemental Lost Output claim; *provided further*, in no event will SCE be obligated to accept a Supplemental Lost Output Report after thirty (30) days following the end of the applicable Term Year.

(c) Product Replacement Damage Amount Calculation.

The Lost Output amount that will be used by SCE in the Product Replacement Damage Amount calculation, set forth in Exhibit F, will be the amount calculated pursuant to Exhibit L or otherwise resolved pursuant to Section 3.23(b).

3.24 Actual Availability Report.

(a) Throughout the Delivery Term, Seller shall prepare and provide to SCE a report with the Actual Available Capacity of the Generating Facility (an "Actual Availability Report") for each month.

This report must be in the form set forth in Exhibit O and must be delivered to SCE no later than the seventh (7th) Business Day following the end of the month which is the subject of the Actual Availability Report.

(b) Upon SCE's request, Seller shall promptly provide to SCE any additional data and supporting documentation necessary for SCE to audit and verify any matters set forth in the Actual Availability Report.

3.25 [Intentionally Omitted].

3.26 Seller's Provision of Historic Solar Data.

(a) Seller shall provide to SCE a minimum of one (1) year of recorded meteorological data from the Site not later than ninety (90) days before Initial Synchronization.

Seller may provide data from additional years if any such data is available.

(b) Data Parameters.

For each equipment station that is installed, Seller shall provide the following data to the extent such data has been recorded:

(i) Total global irradiance;

(ii) Wind direction;

(iii) Wind speed;

(iv) Air temperature;

(v) Barometric pressure;

(vi) Relative humidity;

(vii) Elevation of the station; and

(viii) Latitude and longitude of the station.

(c) Format of Data.

Seller shall provide the data:

(i) In the format to be specified by SCE; and

(ii) In the interval in which such data was recorded.

3.27 [Intentionally Omitted].

3.28 NERC Electric System Reliability Standards.

Throughout the Delivery Term, Seller shall be:

(a) Responsible for complying with any NERC Reliability Standards applicable to the Generating Facility, including registration with NERC as the Generator Operator for the Generating Facility or other applicable category under the NERC Reliability Standards and implementation of all applicable processes and procedures required by NERC, WECC or CAISO for compliance with the NERC Reliability Standards; and

(b) Liable for all penalties assessed by NERC (through WECC or otherwise) for violations of the NERC Reliability Standards by the Generating Facility or Seller, as Generator Operator or other applicable category.

However, if Seller learns that NERC (through WECC or otherwise) is considering or intends to assess Seller with a penalty that Seller believes is attributable to SCE's actions or inactions as SC as described in the document entitled "NERC Reliability Standards - Responsibilities of the Generator Operator, Scheduling Coordinator, CAISO, and Reliability Coordinator" or other successor description or document on the CAISO website at the time of the potential assessment, Seller shall provide SCE with sufficient notice to allow SCE to take part in administrative processes, discussions or settlement negotiations with NERC, WECC or other entity arising from or related to the alleged violation or possible penalty. If the penalty is nonetheless assessed in spite of SCE's participation in the processes, discussions or settlement negotiations, or SCE waives its right to take part in the processes, discussion or settlement negotiations, SCE shall reimburse Seller for the penalty to the extent that:

(c) It was solely caused by SCE's actions or inactions as SC as described in the document entitled "NERC Reliability Standards - Responsibilities of the Generator Operator, Scheduling Coordinator, CAISO, and Reliability Coordinator" or other successor description or document on the CAISO website at the time of the violation; and

(d) Seller can establish to SCE's reasonable satisfaction that the penalty was actually assessed against Seller by NERC and paid by Seller to NERC.

3.29 Application of Prevailing Wage.

To the extent applicable, Seller shall comply with the prevailing wage requirements of Public Utilities Code Section 399.14, subdivision (h).

**** End of ARTICLE THREE ****

ARTICLE FOUR. SCE'S OBLIGATIONS

4.01 Obligation to Pay and Invoice.

(a) SCE shall provide information to Seller regarding CAISO Revenues, CAISO Costs, CAISO Sanctions, and SCE Penalties and shall pay Seller, all in accordance with Exhibit E.

(b) Throughout the Delivery Term, SCE shall purchase Product generated by the Generating Facility and delivered at the Delivery Point in accordance with this Agreement, CAISO Tariff and Applicable Law, provided SCE has no obligation to purchase from Seller any Product that is not or cannot be delivered to the Delivery Point as a result of any circumstance, including:

(i) An outage of the Generating Facility;

(ii) A Force Majeure under Article Five; or

(iii) A reduction or curtailment of deliveries in accordance with Section 3.12(g).

(c) SCE will not be obligated to pay Seller for any Product that Seller delivers in violation of Section 3.12(g), including but not limited to any energy Seller delivers in excess of the amount specified in any OSGC Order or RTOSGC Order, and Seller shall pay all CAISO Sanctions and CAISO Costs, and SCE shall retain all CAISO Revenues.

4.02 Obligations Under MRTU or Equivalent Successor Market.

(a) If SCE Bids the Forecast-Derived Energy into the Day-Ahead Market and the CAISO awards a Schedule as a result of that Bid:

(i) subject to Section 4.02(a)(ii), SCE shall pay Seller for the Metered Amounts in accordance with Exhibit E; and

(ii) SCE shall have the right, but not the obligation, to order Seller to curtail the delivery of energy (an "Over-Schedule Generation Curtailment Order" or "OSGC Order") in excess of a Schedule awarded pursuant to this Section 4.02(a) (the "Over-Schedule Generation Curtailment Quantity" or "OSGC Quantity"). SCE shall pay Seller the Product Price, as adjusted by the Product Payment Allocation Factor, for the OSGC Quantity Seller would have been able to deliver but for the fact that SCE issued an OSGC Order. (The amount of energy that could have been delivered will be determined in accordance with Section 3.23 and Exhibit L, "Sellers Estimate of Lost Output".) The OSGC Quantity is not Curtailed Product.

(b) If no Schedule is awarded for the Forecast-Derived Energy in the Day-Ahead Market, (unless a Schedule is awarded in the Real-Time Market in response to a Bid under Section 4.02(c) or Section 4.02(d)) then, so long as Seller's

Actual Availability Report establishes that the Generating Facility would have been able to deliver but for the fact a Schedule was not awarded (or with respect to any RTOSGC Quantity):

(i) For any non-On-Peak hours (as set forth in Exhibit K), if the Day-Ahead Price is zero dollars ($0) or greater than zero dollars ($0) (a positive price), then SCE will pay Seller the Product Price, as adjusted by the Product Payment Allocation Factor, for the Curtailed Product; or

(ii) For any non-On-Peak hours (as set forth in Exhibit K), if the Day-Ahead Price is less than zero dollars ($0) (a negative price), then:

(1) if the total amount of Curtailed Product in a Term Year is less than the Curtailment Cap, SCE shall have no payment obligation to Seller for Curtailed Product in that Term Year; or

(2) if the total amount of Curtailed Product in a Term Year is greater than the Curtailment Cap, SCE will pay Seller the Product Price, as adjusted by the Product Payment Allocation Factor, for the amount of Curtailed Product greater than the Curtailment Cap in that Term Year. The amount of Curtailed Product paid for by SCE under this Section 4.02(b)(ii)(2) will be included in Banked Curtailed Energy.

(iii) For any On-Peak hours (as set forth in Exhibit K), SCE will pay Seller the Product Price, as adjusted by the Product Payment Allocation Factor, for the amount of such Curtailed Product.

(1) If the Day-Ahead Price is zero dollars ($0) or greater than zero dollars ($0) (a positive price), the amount of Curtailed Product paid for by SCE under this Section 4.02(b)(iii) will not apply toward the Curtailment Cap, and will not be included in Banked Curtailed Energy.

(2) If the Day-Ahead Price is less than zero dollars ($0) (a negative price), the amount of Curtailed Product paid for by SCE under this Section 4.02(b)(iii) will not apply toward the Curtailment Cap, but will be included in Banked Curtailed Energy.

(c) Subject to Seller's compliance with Section 3.12(i), Seller may instruct SCE to submit a Bid in the Real-Time Market for the Unawarded Energy; *provided*,

(i) Seller's instructions must be submitted prior to 6:00 p.m. PPT on the day before the operating day, and

(ii) such instructions will specify for each hour of the applicable operating day either:

(1) a single price in dollars per MWh for each hour , or

(2) that SCE shall Bid the Unawarded Energy as Price Taker.

If a Schedule is awarded by CAISO for that Bid, then Seller shall generate and deliver energy to the Delivery Point and:

(iii) if the Real-Time Price for the energy delivered under this Section 4.02(c) is zero dollars ($0) or greater than zero dollars ($0) (a positive price), then SCE shall pay Seller for the Metered Amounts in accordance with Exhibit E; or

(iv) if the Real-Time Price for the energy delivered under this Section 4.02(c) is less than zero dollars ($0) (a negative price), then SCE shall pay Seller for the Metered Amounts in accordance with Exhibit E and Seller shall pay any CAISO Costs associated with that negative price.

(d) Notwithstanding an instruction from Seller pursuant to Section 4.02(c) to Bid the Unawarded Energy in the Real-Time Market, SCE shall have the right to Bid the Unawarded Energy at a price lower than the price specified by Seller pursuant to Section 4.02(c)(ii)(1). If Seller does not instruct SCE to Bid the Unawarded Energy in accordance with Section 4.02(c), then SCE may Bid all or a portion of the Unawarded Energy in the Real-Time Market. If a Bid submitted by SCE pursuant to the conditions set forth in either of the two preceding sentences is awarded a Schedule:

(i) Seller shall generate and deliver energy to SCE at the Delivery Point. SCE shall, subject to Section 4.02(d)(ii), pay Seller for the Metered Amounts in accordance with Exhibit E, and SCE shall pay any CAISO Costs associated with the quantity of energy that was Scheduled and delivered under this Section 4.02(d); and

(ii) SCE shall have the right, but not the obligation, to order Seller to curtail the delivery of energy (a "Real-Time Over-Schedule Generation Curtailment Order" or "RTOSGC Order") in excess of a Schedule awarded pursuant to this Section (4.02(d) (the "Real-Time Over-Schedule Generation Curtailment Quantity" or "RTOSGC Quantity"). The RTOSGC Quantity is Curtailed Product, and SCE shall pay Seller for such Curtailed Product as set forth in Section 4.02(b).

4.03 <u>SCE's Check Meter</u>.

(a) <u>Providing Access to Seller</u>.

Before Initial Synchronization, SCE shall provide to Seller remote access to the Check Meter through a website as specified by SCE. SCE may change the website and protocols from time to time.

(b) Testing of Check Meter.

SCE shall test and recalibrate the Check Meter at least once every Term Year. The Check Meter will be locked or sealed, and the lock or seal will be broken, only by a SCE representative. Seller has the right to be present whenever such lock or seal is broken. SCE shall replace the Check Meter battery at least once every 36 months; *provided*, if the Check Meter battery fails, SCE shall promptly replace such battery.

(c) Use of Check Meter for Back-Up Purposes.

(i) SCE shall routinely compare the Check Meter data to the CAISO Approved Meter data after adjusting the Check Meter for any compensation introduced by the CAISO into the CAISO Approved Meter.

(ii) If the deviation between the CAISO Approved Meter data and the Check Meter data for any comparison is greater than 0.3%, SCE shall provide Notice to Seller of such deviation and the Parties will mutually arrange for a meter check or recertification of the Check Meter or CAISO Approved Meter, as applicable.

(iii) SCE will bear its own costs for any meter check or recertification of the Check Meter.

(d) Testing procedures and standards for the Check Meter will be the same as for a comparable SCE-owned revenue-grade meter. Seller has the right to have representatives present during all such tests.

4.04 Scheduling Coordinator.

Commencing on Initial Synchronization, SCE shall act as Seller's Scheduling Coordinator and carry out all duties as Scheduling Coordinator in accordance with CAISO Tariff protocols.

4.05 Termination of Scheduling Coordinator.

SCE shall submit a letter to the CAISO identifying the date on which SCE resigns as Seller's Scheduling Coordinator on the first to occur of the following:

(a) Thirty (30) days before the end of the Term;

(b) The date of any Notice from Seller of suspension of its performance pursuant to Section 6.02; or

(c) The date of any early termination of this Agreement.

4.06 Exclusive Rights to Product and Cost Responsibility.

(a) SCE has the exclusive right, at any time or from time to time, to sell, assign, convey, transfer, allocate, designate, award, report or otherwise provide any and all such Green Attributes, Capacity Attributes or Resource Adequacy

Benefits conveyed by Seller to SCE during the Delivery Term to third parties; *provided*, no such action constitutes a transfer of, or a release of SCE of, its obligations under this Agreement.

(b) Subject to Seller's obligations under this Agreement, including Sections 3.01, 3.02, 3.08, 3.12, and 3.20, SCE shall be responsible for any costs arising from or directly related to SCE's accounting for or otherwise claiming Green Attributes, Capacity Attributes and Resource Adequacy Benefits.

4.07 Interest Payments on Cash Deposits.

(a) SCE shall make monthly Simple Interest Payments, calculated using the Federal Funds Effective Rate, to Seller on cash amounts posted for the:

(i) Development Security; and

(ii) Performance Assurance.

(b) Upon receipt of a monthly invoice (provided by Seller to SCE's Manager of Credit and Collateral as set forth in Exhibit C) that sets forth the calculation of the Simple Interest Payment amount due, SCE shall make payment thereof by the third (3rd) Local Business Day of the first month after the last month to which the invoice relates so long as such date is after the day on which such invoice is received; *provided*,

(i) No Event of Default has occurred and is continuing with respect to Seller; and

(ii) No Early Termination Date for which any unsatisfied payment obligation of Seller exists, has occurred or has been designated as the result of an Event of Default by Seller.

(c) On or after the occurrence of an Event of Default by Seller or an Early Termination Date as a result of an Event of Default by Seller, SCE will retain any such Simple Interest Payment amount as an additional Development Security amount or a Performance Assurance amount hereunder until:

(i) In the case of an Early Termination Date, the obligations of Seller under this Agreement have been satisfied; or

(ii) In the case of an Event of Default, for so long as such Event of Default is continuing.

**** End of ARTICLE FOUR ****

ARTICLE FIVE. FORCE MAJEURE

5.01 No Default for Force Majeure.

Neither Party will be considered to be in default in the performance of any of its obligations set forth in this Agreement (except for obligations to pay money) when and to the extent failure of performance is caused by Force Majeure.

5.02 Requirements Applicable to the Claiming Party.

If a Party, because of Force Majeure, is rendered wholly or partly unable to perform its obligations when due under this Agreement, that Party (the "Claiming Party"), will be excused from whatever performance is affected by the Force Majeure to the extent so affected, *provided,* the Claiming Party must have complied with (a) and (b) directly below.

In order to be excused from its performance obligations hereunder by reason of Force Majeure:

(a) The Claiming Party, within fourteen (14) days after the initial occurrence of the claimed Force Majeure, must give the other Party Notice describing the particulars of the occurrence; and

(b) The Claiming Party must provide timely evidence reasonably sufficient to establish that the occurrence constitutes Force Majeure as defined in this Agreement.

The suspension of the Claiming Party's performance due to Force Majeure will be of no greater scope and of no longer duration than is required by the Force Majeure.

In addition, the Claiming Party shall use commercially reasonable and diligent efforts to remedy its inability to perform.

This Section 5.02 does not require the settlement of any strike, walkout, lockout or other labor dispute on terms which, in the sole judgment of the Claiming Party, are contrary to its interest.

It is understood and agreed that the settlement of strikes, walkouts, lockouts or other labor disputes will be at the sole discretion of the Claiming Party.

When the Claiming Party is able to resume performance of its obligations under this Agreement, the Claiming Party shall give the other Party prompt Notice to that effect.

5.03 Commercial Operation Deadline Extension.

If the Commercial Operation Date does not occur on or before the Commercial Operation Deadline as the result of a Force Majeure occurring before the Commercial Operation Deadline, then the Commercial Operation Deadline will, subject to Sections 1.04 and 5.04 and Seller's compliance with its obligations as the Claiming Party under Section 5.02, be extended on a day-for-day basis for the duration of the Force Majeure.

5.04 Termination.

Either Party may terminate this Agreement on Notice, which will be effective five (5) Business Days after such Notice is provided, if an event of Force Majeure extends for more than three hundred sixty-five (365) consecutive days which materially and adversely affects the operations of the Claiming Party, or the Generating Facility is destroyed or rendered inoperable by a Force Majeure, and an independent, third party engineer determines in writing that the Generating Facility cannot be repaired or replaced within an aggregate period of twenty-four (24) months after the first day of such Force Majeure.

**** End of ARTICLE FIVE ****

ARTICLE SIX. EVENTS OF DEFAULT; REMEDIES

6.01 Events of Default.

An "Event of Default" means, with respect to a Party (a "Defaulting Party"), the occurrence of any of the following:

(a) With respect to either Party:

(i) Any representation or warranty made by such Party herein is false or misleading in any material respect when made or when deemed made or repeated if the representation or warranty is continuing in nature, *provided*, if:

(1) The misrepresentation or breach of warranty is capable of a cure, an Event of Default will be deemed to occur if the misrepresentation or breach of warranty is not remedied within five (5) Business Days after Notice; or

(2) The misrepresentation or breach of warranty is not capable of a cure, but the non-breaching Party's damages resulting from the inaccuracy can reasonably be ascertained, an Event of Default will be deemed to occur if the payment of such damages is not made within ten (10) Business Days after a Notice of these damages is provided by the non-breaching Party to the breaching Party;

(ii) Except for an obligation to make payment when due, the failure to perform any material covenant or obligation set forth in this Agreement (except to the extent constituting a separate Event of Default specified below or to the extent excused by a Force Majeure) if this failure is not remedied within thirty (30) days after Notice of the failure, which Notice sets forth in reasonable detail the nature of the failure; *provided*, if the failure is not reasonably capable of being cured within the thirty (30) day cure period specified above, the Party will have such additional time (not exceeding an additional one hundred twenty (120) days) as is reasonably necessary to cure the failure, so long as the Party promptly commences and diligently pursues the cure;

(iii) A Party fails to make when due any payment required under this Agreement and this failure is not cured within five (5) Business Days after Notice of the failure;

(iv) A Party becomes Bankrupt; or

(v) A Party consolidates or amalgamates with, or merges with or into, or transfers all or substantially all of its assets to, another entity and, at the time of such consolidation, amalgamation, merger or transfer, the resulting, surviving or transferee entity fails to assume all the

obligations of that Party under this Agreement either by operation of law or pursuant to an agreement reasonably satisfactory to the other Party.

(b) With respect to Seller:

(i) Seller fails to post and maintain the Development Security pursuant to Section 3.06(a), and such failure is not cured within three (3) Business Days after Notice from SCE;

(ii) Seller fails to post and maintain the Performance Assurance pursuant to Section 8.02, and such failure is not cured within three (3) Business Days after Notice from SCE;

(iii) Commercial Operation does not occur on or before the Commercial Operation Deadline;

(iv) Except as permitted in Sections 10.04 and 10.05, Seller does not own or otherwise have control of the Generating Facility;

(v) Seller does not have Site Control in accordance with Section 3.09 and Seller has not cured such failure within sixty (60) days after the occurrence of the event which results in the failure;

(vi) The sum of Qualified Amounts plus Lost Output in any consecutive six (6) month period is not at least ten percent (10%) of the Expected Annual Net Energy Production, and Seller fails to demonstrate to SCE's reasonable satisfaction, within ten (10) Business Days after Notice from SCE, a legitimate reason for the failure to meet the ten percent (10%) minimum;

(vii) [Intentionally Omitted];

(viii) Seller intentionally or knowingly Forecasts or delivers, or attempts to Forecast or deliver, at the Delivery Point for sale under this Agreement electric energy that was not in fact generated by the Generating Facility;

(ix) Seller installs generating capacity in excess of the Contract Capacity and such excess generating capacity is not removed within five (5) Business Days after Notice from SCE;

(x) Seller removes from the Site equipment upon which the Contract Capacity has been based, except for the purposes of replacement, refurbishment, repair or maintenance, and the equipment is not returned within five (5) Business Days after Notice from SCE;

(xi) The Generating Facility consists of an ERR type(s) different than that specified in Section 1.01(c);

(xii) Except where there has been a change in Applicable Laws that would affect Seller's status as an ERR, and Seller has made commercially reasonable efforts in accordance with Section 10.02(c) to comply with the change in law, the Generating Facility fails to qualify as an ERR;

(xiii) Except where there has been a change in law that would affect the eligibility of electric energy to qualify as renewable energy for the purposes of the RPS Legislation and Seller has made commercially reasonable efforts in accordance with Section 10.02(c) to comply with the change in law, any electric energy from the Generating Facility and sold or to be sold to SCE hereunder fails to qualify as eligible renewable energy for purposes of the RPS Legislation;

(xiv) A termination of, or cessation of service under, any agreement necessary for Seller:

(1) To interconnect the Generating Facility to the Transmission Provider's electric system;

(2) To transmit the electric energy on the Transmission Provider's electric system; or

(3) To comply with the CAISO Tariff;

provided, if a termination of, or cessation of service under, any such agreement is not due to the fault of Seller, Seller shall have thirty (30) days from such termination or cessation to cure such failure;

(xv) Subject to Section 1.11, Seller fails to take any actions necessary to dedicate, convey or effectuate the use of any and all Green Attributes, Capacity Attributes and Resource Adequacy Benefits, if any, for SCE's sole benefit as specified in Section 3.01;

(xvi) Except for Credit and Collateral Requirements in Article Eight for which there is a separate Event of Default specified in this Section 6.01, Seller fails to satisfy the Credit and Collateral Requirements in Article Eight and the failure is not cured within three (3) Business Days after Notice from SCE;

(xvii) Subject to the terms of a Collateral Assignment Agreement, the occurrence and continuation of a default, event of default or other similar condition or event under one or more agreements or instruments relating to indebtedness for borrowed money, which results in the indebtedness becoming, or becoming capable at such time of being declared, immediately due and payable;

(xviii) The stock, equity ownership interest in Seller or assets of Seller has been pledged or assigned as collateral or otherwise to any party other than Lender; or

(xix) Seller transfers or assigns the Interconnection Queue Position.

6.02 Early Termination.

If an Event of Default shall have occurred, the Party taking the default (the "Non-Defaulting Party") has the right:

(a) To designate by Notice, which will be effective five (5) Business Days after the Notice is given, a day, no later than twenty (20) calendar days after the Notice is effective, for the early termination of this Agreement (an "Early Termination Date"); *provided*, a Non-Defaulting Party's right to terminate this Agreement pursuant to this Section 6.02(a) may only be exercised within one hundred and eighty (180) days from the date that the default giving rise to the applicable Event of Default is no longer continuing, or, if no cure period is provided for, from the date the Non-Defaulting Party becomes aware of the Event of Default; and

(b) To pursue all remedies available at law or in equity against the Defaulting Party (including monetary damages), except to the extent that such remedies are limited by the terms of this Agreement.

Upon the effective designation of an Early Termination Date, the Non-Defaulting Party will have the right to immediately suspend performance under this Agreement, including performance under Section 3.01(e) but excluding the obligation to post and maintain Development Security and Performance Assurance in accordance with Section 3.06 or Article Eight.

6.03 Termination Payment.

As soon as practicable after an Early Termination Date is declared, the Non-Defaulting Party shall provide Notice to the Defaulting Party of the Termination Payment.

The Notice must include a written statement setting forth, in reasonable detail, the calculation of such Termination Payment including the Forward Settlement Amount, together with appropriate supporting documentation.

If the Termination Payment is positive, the Defaulting Party shall pay such amount to the Non-Defaulting Party within ten (10) Business Days after the Notice is provided. If the Termination Payment is negative (i.e., the Non-Defaulting Party owes the Defaulting Party more than the Defaulting Party owes the Non-Defaulting Party), then the Non-Defaulting Party shall pay such amount to the Defaulting Party within thirty (30) days after the Notice is provided.

The Parties shall negotiate in good faith to resolve any disputes regarding the calculation of the Termination Payment. Any disputes which the Parties are unable to resolve through negotiation may be submitted for resolution through mediation and arbitration as provided in Article Twelve.

**** End of ARTICLE SIX ****

ARTICLE SEVEN. LIMITATIONS OF LIABILITIES

EXCEPT AS SET FORTH HEREIN, THERE ARE NO WARRANTIES BY EITHER PARTY UNDER THIS AGREEMENT, INCLUDING ANY WARRANTY OF MERCHANTABILITY OR FITNESS FOR A PARTICULAR PURPOSE, AND ANY AND ALL IMPLIED WARRANTIES ARE DISCLAIMED. THE PARTIES CONFIRM THAT THE EXPRESS REMEDIES AND MEASURES OF DAMAGES PROVIDED IN THIS AGREEMENT SATISFY THE ESSENTIAL PURPOSES HEREOF.

FOR BREACH OF ANY PROVISION FOR WHICH AN EXPRESS REMEDY OR MEASURE OF DAMAGES IS PROVIDED, SUCH EXPRESS REMEDY OR MEASURE OF DAMAGES WILL BE THE SOLE AND EXCLUSIVE REMEDY, THE OBLIGOR'S LIABILITY WILL BE LIMITED AS SET FORTH IN SUCH PROVISION AND ALL OTHER REMEDIES OR DAMAGES AT LAW OR IN EQUITY ARE WAIVED, UNLESS THE PROVISION IN QUESTION PROVIDES THAT THE EXPRESS REMEDIES ARE IN ADDITION TO OTHER REMEDIES THAT MAY BE AVAILABLE.

SUBJECT TO SECTION 12.04, IF NO REMEDY OR MEASURE OF DAMAGES IS EXPRESSLY PROVIDED HEREIN, THE OBLIGOR'S LIABILITY WILL BE LIMITED TO DIRECT ACTUAL DAMAGES ONLY, SUCH DIRECT ACTUAL DAMAGES WILL BE THE SOLE AND EXCLUSIVE REMEDY AND ALL OTHER REMEDIES OR DAMAGES AT LAW OR IN EQUITY ARE WAIVED.

DIRECT DAMAGES INCLUDE THE VALUE OF ANY FEDERAL TAX CREDITS SELECTED IN SECTION 1.10(a), (b), OR (c), DETERMINED ON AN AFTER-TAX BASIS, THAT ARE LOST BY SELLER DUE TO AN EVENT OF DEFAULT BY SCE WHERE SELLER PROVIDED NOTICE OF EARLY TERMINATION TO SCE IN ACCORDANCE WITH SECTION 6.02(a) AND SELLER HAS NOT BEEN ABLE TO MITIGATE THAT LOSS AFTER USE OF REASONABLE EFFORTS.

UNLESS EXPRESSLY PROVIDED IN THIS AGREEMENT, INCLUDING WITHOUT LIMITATION THE PROVISIONS OF SECTION 10.03 (INDEMNITY), NEITHER PARTY WILL BE LIABLE FOR CONSEQUENTIAL, INCIDENTAL, PUNITIVE, EXEMPLARY OR INDIRECT DAMAGES, LOST PROFITS OR OTHER BUSINESS INTERRUPTION DAMAGES, BY STATUTE, IN TORT OR CONTRACT, UNDER ANY INDEMNITY PROVISION OR OTHERWISE.

IT IS THE INTENT OF THE PARTIES THAT THE LIMITATIONS HEREIN IMPOSED ON REMEDIES AND THE MEASURE OF DAMAGES BE WITHOUT REGARD TO THE CAUSE OR CAUSES RELATED THERETO, INCLUDING THE NEGLIGENCE OF ANY PARTY, WHETHER SUCH NEGLIGENCE BE SOLE, JOINT OR CONCURRENT, OR ACTIVE OR PASSIVE.

TO THE EXTENT ANY DAMAGES REQUIRED TO BE PAID HEREUNDER ARE LIQUIDATED, THE PARTIES ACKNOWLEDGE THAT THE DAMAGES ARE DIFFICULT OR IMPOSSIBLE TO DETERMINE, OR OTHERWISE OBTAINING AN ADEQUATE REMEDY IS INCONVENIENT AND THE DAMAGES CALCULATED

HEREUNDER CONSTITUTE A REASONABLE APPROXIMATION OF THE HARM OR LOSS.

NOTHING IN THIS ARTICLE PREVENTS, OR IS INTENDED TO PREVENT SCE FROM PROCEEDING AGAINST OR EXERCISING ITS RIGHTS WITH RESPECT TO ANY DEVELOPMENT SECURITY, OR PERFORMANCE ASSURANCE.

**** End of ARTICLE SEVEN ****

ARTICLE EIGHT. CREDIT AND COLLATERAL REQUIREMENTS

8.01 Financial Information.

(a) If requested by one Party, the other Party shall deliver the following financial statements, which in all cases must be for the most recent accounting period and prepared in accordance with GAAP:

(i) Within one hundred twenty (120) days following the end of each fiscal year, a copy of its annual report containing audited consolidated financial statements (income statement, balance sheet, statement of cash flows and statement of retained earnings and all accompanying notes) for such fiscal year, setting forth in each case in comparative form the figures for the previous year; and

(ii) Within sixty (60) days after the end of each of its first three fiscal quarters of each fiscal year, a copy of its quarterly report containing consolidated financial statements (income statement, balance sheet, statement of cash flows and statement of retained earnings and all accompanying notes) for such fiscal quarter and the portion of the fiscal year through the end of such quarter, setting forth in each case in comparative form the figures for the previous year.

(b) In each case, the financial statements specified in Sections 8.01(a)(i) and 8.01(a)(ii) above must be:

(i) Certified in accordance with all applicable laws and regulations, including all applicable SEC rules and regulations, if such Party is an SEC reporting company; or

(ii) Certified by a Responsible Officer as being fairly stated in all material respects (subject to normal year end audit adjustments) if such Party is not an SEC reporting company;

(c) For purposes of the requirement set forth in Section 8.01(a)

(i) If a Party's financial statements are publicly available electronically on the website of that Party or the SEC, then the Party shall be deemed to have met the requirements of Section 8.01(a); and

(ii) Should any such financial statements not be available on a timely basis due to a delay in preparation or certification, that delay will not be an Event of Default so long as the producing party diligently pursues the preparation, certification and delivery of the statements.

8.02 Development Security and Performance Assurance.

(a) Posting Performance Assurance.

On or before the Commercial Operation Date, Seller shall post Performance Assurance with SCE.

The Performance Assurance Amount due to SCE by Seller will be as set forth in Section 1.07.

The Performance Assurance Amount shall be posted to SCE and maintained at all times during the Term and thereafter until such time as Seller has satisfied all monetary obligations which survive any termination of this Agreement, not to exceed one year following the end of the Term.

The Performance Assurance Amount must be either in the form of cash or Letter of Credit acceptable to SCE, *provided*, on the commencement of the Term, if Seller has posted the Development Security in the form of cash or a Letter of Credit and SCE has not either returned the Development Security to Seller or given Seller Notice, pursuant to Exhibit K, of its determination regarding the disposition of the Development Security by such date, then Seller may withhold the portion of the Performance Assurance Amount equal to the Development Security or any portion thereof held by SCE at that time until three (3) Business Days following the later of Seller's receipt or forfeiture of the Development Security or any portion thereof pursuant to Section 3.06 and Exhibit K, after which Seller shall be obligated to post the full Performance Assurance Amount.

(b) Letters of Credit.

Development Security and Performance Assurance provided in the form of a Letter of Credit must be subject to the following provisions:

(i) Each Letter of Credit must be maintained for the benefit of SCE;

(ii) Seller shall:

(1) Renew or cause the renewal of each outstanding Letter of Credit on a timely basis as provided in the relevant Letter of Credit;

(2) If the bank that issued an outstanding Letter of Credit has indicated its intent not to renew such Letter of Credit, provide alternative Development Security or Performance Assurance acceptable to SCE at least twenty (20) Business Days before the expiration of the outstanding Letter of Credit; and

(3) If the bank issuing a Letter of Credit fails to honor SCE's properly documented request to draw on an outstanding Letter of Credit, provide alternative Development Security or Performance Assurance acceptable to SCE within three (3) Business Days after such refusal;

(iii) Upon the occurrence of a Letter of Credit Default, Seller shall provide to SCE either a substitute Letter of Credit or alternative Development

Security or Performance Assurance acceptable to SCE, in each case on or before the third (3rd) Business Day after the occurrence thereof;

(iv) Upon, or at any time after, the occurrence and continuation of an Event of Default by Seller, or if an Early Termination Date has occurred or been designated as a result of an Event of Default by Seller for which there exist any unsatisfied payment obligations, then SCE may draw on any undrawn portion of any outstanding Letter of Credit upon submission to the bank issuing such Letter of Credit of one or more certificates specifying that such Event of Default or Early Termination Date has occurred and is continuing.

In addition, SCE will have the right to draw on the Letter of Credit for any of the following reasons:

(1) The Letter of Credit will expire in fewer than twenty (20) Local Business Days and Seller has not provided SCE alternative Development Security or Performance Assurance acceptable to SCE.

(2) The Seller or the issuer of the Letter of Credit has provided written notice to SCE of either Seller's or the issuer's intent not to renew the Letter of Credit following the present expiration date thereof ("Notice of Non-Renewal"), and Seller has failed to provide SCE with a replacement Letter of Credit satisfactory to SCE in its sole discretion within thirty (30) days following the date of the Notice of Non-Renewal.

(3) SCE has not been paid any or all of Seller's payment obligations due and payable under the Agreement.

Cash proceeds received by SCE from drawing upon the Letter of Credit pursuant to this Section 8.02(b)(iv) (except item (3) above for payment obligations due and payable) will be deemed Development Security or Performance Assurance (as applicable) as security for Seller's obligations to SCE and SCE will have the rights and remedies set forth in Section 8.03 with respect to such cash proceeds.

Notwithstanding SCE's receipt of cash proceeds of a drawing under the Letter of Credit, Seller shall remain liable for any:

(4) Failure to provide or maintain the required Development Security or Performance Assurance (including failure to replenish a Letter of Credit to the full Development Security or Performance Assurance Amount in the event that SCE draws against the Letter of Credit for any reason other than to satisfy a Termination Payment); or

(5) Any amounts owing to SCE and remaining unpaid after the application of the amounts so drawn by SCE; and

(v) In all cases, the costs and expenses of establishing, renewing, replenishing, substituting, canceling, and increasing the amount of any and all Letters of Credit will be borne by Seller.

8.03 First Priority Security Interest in Cash or Cash Equivalent Collateral.

To secure its obligations under this Agreement, and until released as provided herein, Seller hereby grants to SCE a present and continuing first-priority security interest ("Security Interest") in, and lien on (and right to net against), and assignment of the Development Security, Performance Assurance, any other cash collateral and cash equivalent collateral posted pursuant to Sections 3.06 and 8.02 and any and all interest thereon or proceeds resulting therefrom or from the liquidation thereof, whether now or hereafter held by, on behalf of, or for the benefit of SCE, and Seller agrees to take all action as SCE reasonably requires in order to perfect SCE's Security Interest in, and lien on (and right to net against), such collateral and any and all proceeds resulting therefrom or from the liquidation thereof.

Upon or any time after the occurrence of an Event of Default caused by Seller, an Early Termination Date resulting from an Event of Default caused by Seller, or an occasion provided for in this Agreement where SCE is authorized to retain all or a portion of the Development Security or Performance Assurance, SCE may do any one or more of the following:

(a) Exercise any of its rights and remedies with respect to the Development Security and Performance Assurance, including any such rights and remedies under law then in effect;

(b) Draw on any outstanding Letter of Credit issued for its benefit; and

(c) Liquidate all Development Security or Performance Assurance (as applicable) then held by or for the benefit of SCE free from any claim or right of any nature whatsoever of Seller, including any equity or right of purchase or redemption by Seller.

SCE shall apply the proceeds of the collateral realized upon the exercise of any such rights or remedies to reduce Seller's obligations under this Agreement (Seller remains liable for any amounts owing to SCE after such application), subject to SCE's obligation to return any surplus proceeds remaining after these obligations are satisfied in full.

8.04 Credit and Collateral Covenants.

(a) Seller shall, from time to time as requested by SCE, execute, acknowledge, record, register, deliver and file all such notices, statements, instruments and other documents as may be necessary or advisable to render fully valid and

enforceable under all applicable laws the rights, liens and priorities of SCE with respect to the Security Interest provided for herein and therein.

(b) Seller may not cause or permit the stock, equity ownership interest in Seller or assets of Seller to be pledged or assigned as collateral or otherwise to any party other than Lender.

(c) Seller may not create, incur, issue, assume, guarantee or otherwise become directly or indirectly liable for, contingently or otherwise, any Seller's Debt, or issue any Disqualified Stock, in each case, other than Seller's Debt incurred, issued, assumed or guaranteed, or Disqualified Stock issued, in connection with the funding of the development, construction or Operation of the Generating Facility.

(d) Except for liens for the benefit of Lender, Seller may not create, incur, assume or suffer to be created by it or any subcontractor, employee, laborer, materialman, other supplier of goods or services or any other person, any lien on Seller's interest (or any part thereof) in this Agreement, the Site or the Generating Facility.

Seller promptly shall pay or discharge, or shall cause its contractors to promptly pay and discharge, and discharge of record, any such lien for labor, materials, supplies or other obligations upon Seller's interest in the Site, the Generating Facility, or any part thereof or interest therein, unless Seller is disputing any such lien in good faith and only for so long as it does not create an imminent risk of a sale or transfer of the Generating Facility or a material part thereof.

Seller shall promptly notify SCE of any attachment or imposition of any lien against Seller's interest (or any part thereof) in the Site, the Generating Facility, or any part thereof or interest therein.

(e) Seller may not hold any material assets, become liable for any material obligations or engage in any material business activities other than the development, construction and Operation of the Generating Facility.

(f) Seller may not own, form or acquire, or otherwise conduct any of its activities through, any direct or indirect subsidiary.

(g) During any period during which Seller is a Defaulting Party, Seller may not:

(i) Declare or pay any dividend, or make any other distribution or payment, on account of any equity interest in Seller; or

(ii) Otherwise make any distribution or payment to any Affiliate of Seller.

8.05 Commercial Code Waiver.

This Agreement sets forth the entirety of the agreement of the Parties regarding credit, collateral and adequate assurances. Except as expressly set forth in Article Eight of this Agreement, neither Party:

(a) Has or will have any obligation to post margin, provide letters of credit, pay deposits, make any other prepayments or provide any other financial assurances, in any form whatsoever; or

(b) Will have reasonable grounds for insecurity with respect to the creditworthiness of a Party that is complying with the relevant provisions of Article Eight of this Agreement;

and all implied rights relating to financial assurances arising from Section 2609 of the California Commercial Code or case law applying similar doctrines, are hereby waived.

**** End of ARTICLE EIGHT ****

ARTICLE NINE. GOVERNMENTAL CHARGES

9.01 Cooperation to Minimize Tax Liabilities.

Each Party shall use reasonable efforts to implement the provisions of and to administer this Agreement in accordance with the intent of the Parties to minimize all taxes, so long as neither Party is materially adversely affected by such efforts.

9.02 Governmental Charges.

Seller shall pay or cause to be paid all taxes imposed by any Governmental Authority ("Governmental Charges") on or with respect to the Metered Amounts (and any contract associated with the Metered Amounts) arising before the Delivery Point, including ad valorem taxes and other taxes attributable to the Generating Facility, land, land rights or interests in land for the Generating Facility.

SCE shall pay or cause to be paid all Governmental Charges on or with respect to the Metered Amounts at and from the Delivery Point. If Seller is required by law or regulation to remit or pay Governmental Charges which are SCE's responsibility hereunder, SCE shall promptly reimburse Seller for such Governmental Charges.

If SCE is required by law or regulation to remit or pay Governmental Charges which are Seller's responsibility hereunder, SCE may deduct such amounts from monthly Product Payments to Seller made pursuant to Exhibit E.

If SCE elects not to deduct such amounts from Seller's monthly Product Payments, Seller shall promptly reimburse SCE for such amounts upon SCE's Payment Invoice request. Nothing shall obligate or cause a Party to pay or be liable to pay any Governmental Charges for which that Party is exempt under the law.

9.03 Providing Information to Taxing Authorities.

Seller or SCE, as necessary, shall provide information concerning the Generating Facility to any requesting taxing authority.

**** End of ARTICLE NINE ****

ARTICLE TEN. MISCELLANEOUS

10.01 Representations and Warranties.

On the Effective Date, each Party represents and warrants to the other Party that:

(a) It is duly organized, validly existing and in good standing under the laws of the jurisdiction of its formation;

(b) Except for CPUC Approval in the case of SCE, and all Permits in the case of Seller, it has or will timely acquire all regulatory authorizations necessary for it to legally perform its obligations under this Agreement;

(c) The execution, delivery and performance of this Agreement are within its powers, have been duly authorized by all necessary action and do not violate any of the terms and conditions in its governing documents, any contracts to which it is a party or any law, rule, regulation, order or the like applicable to it;

(d) This Agreement constitutes a legally valid and binding obligation enforceable against it in accordance with its terms, subject to any Equitable Defenses;

(e) There is not pending, or to its knowledge, threatened against it or, in the case of Seller, any of its Affiliates, any legal proceedings that could materially adversely affect its ability to perform under this Agreement;

(f) No Event of Default with respect to it has occurred and is continuing and no such event or circumstance would occur as a result of its entering into or performing its obligations under this Agreement;

(g) It is acting for its own account and its decision to enter into this Agreement is based upon its own judgment, not in reliance upon the advice or recommendations of the other Party and it is capable of assessing the merits of and understanding, and understands and accepts the terms, conditions and risks of this Agreement; and

(h) It has not relied upon any promises, representations, statements or information of any kind whatsoever that are not contained in this Agreement in deciding to enter into this Agreement.

10.02 Additional Seller Representations, Warranties and Covenants.

(a) Seller hereby covenants to SCE that throughout the Delivery Term:

(i) Seller shall own and Operate the Generating Facility;

(ii) Seller shall deliver to SCE the Product free and clear of all liens, security interests, claims and encumbrances or any interest therein or thereto by any person;

(iii) Seller shall hold the rights to all Green Attributes, Capacity Attributes and Resource Adequacy Benefits, which Seller has conveyed and has committed to convey to SCE hereunder;

(iv) Seller shall obtain, maintain and remain in compliance with all Permits, interconnection agreements and transmission rights necessary to Operate the Generating Facility and to deliver electric energy from the Generating Facility to the Delivery Point;

(v) Subject to Section 1.11, Seller shall take all actions necessary for the Project to qualify and be certified by the CEC as an ERR; and

(vi) Subject to Section 1.11, Seller shall take all actions necessary for the Product delivered to SCE to qualify under the requirements of the California Renewables Portfolio Standard.

(b) Seller, and, if applicable, its successors, represents and warrants that throughout the Delivery Term of this Agreement that:

(i) The Project qualifies and is certified by the CEC as an Eligible Renewable Energy Resource ("ERR") as such term is defined in Public Utilities Code Section 399.12 or Section 399.16; and

(ii) The Project's output delivered to Buyer qualifies under the requirements of the California Renewables Portfolio Standard.

To the extent a change in law occurs after execution of this Agreement that causes this representation and warranty to be materially false or misleading, it shall not be an Event of Default if Seller has used commercially reasonable efforts to comply with such change in law.

(c) Seller and, if applicable, its successors, represents and warrants that throughout the Delivery Term of this Agreement the Renewable Energy Credits transferred to Buyer conform to the definition and attributes required for compliance with the California Renewables Portfolio Standard, as set forth in California Public Utilities Commission Decision 08-08-028, and as may be modified by subsequent decision of the California Public Utilities Commission or by subsequent legislation. To the extent a change in law occurs after execution of this Agreement that causes this representation and warranty to be materially false or misleading, it shall not be an Event of Default if Seller has used commercially reasonable efforts to comply with such change in law.

(d) The term "commercially reasonable efforts" as used in Section 10.02(b) and Section 10.02(c) means efforts consistent with and subject to Section 1.11.

(e) Seller warrants that all necessary steps to allow the Renewable Energy Credits transferred to Buyer to be tracked in the Western Renewable Energy

Generation Information System will be taken prior to the first delivery under the contract.

(f) Seller hereby represents and warrants that, as of the Effective Date, it has no knowledge of any plans by SCE or another Transmission Provider to seek to construct a transmission or distribution line through or on the Site.

10.03 Indemnity.

(a) SCE's Indemnification Obligations.

In addition to any other indemnification obligations SCE may have elsewhere in this Agreement, which are hereby incorporated in this Section 10.03(a), SCE releases, and shall indemnify, defend and hold harmless Seller, and Seller's directors, officers, employees, agents, assigns, and successors in interest, from and against any and all loss, liability, damage, claim, cost, charge, demand, fine, penalty or expense of any kind or nature (including any direct, damage, claim, cost, charge, demand, or expense, and attorneys' fees (including cost of in-house counsel) and other costs of litigation, arbitration and mediation, and in the case of third-party claims only, indirect and consequential loss or damage of such third-party), arising out of or in connection with:

(i) any breach made by SCE of its representations and warranties in Sections 10.01 and 10.02; and

(ii) so long as Seller has fully complied with the Generator Operator Obligations and Generator Owner Obligations, any NERC Standards Non-Compliance Penalties which are solely due to SCE's negligence in performing its role as Seller's Scheduling Coordinator throughout the Delivery Term.

This indemnity applies notwithstanding Seller's active or passive negligence. However, Seller will not be indemnified hereunder for its loss, liability, damage, claim, cost, charge, demand or expense to the extent caused by its gross negligence or willful misconduct.

(b) Seller's Indemnification Obligations.

In addition to any other indemnification obligations Seller may have elsewhere in this Agreement, which are hereby incorporated in this Section 10.03(b), Seller releases, and shall indemnify, defend and hold harmless SCE, and SCE's directors, officers, employees, agents, assigns, and successors in interest, from and against any and all loss, liability, damage, claim, cost, charge, demand, penalty, fine or expense of any kind or nature (including any direct, damage, claim, cost, charge, demand, or expense, and attorneys' fees (including cost of in-house counsel) and other costs of litigation, arbitration or mediation, and in the case of third-party claims only, including claims arising from a breach of Section 10.02(b), indirect or

consequential loss or damage of such third-party), arising out of or in connection with:

(i) any breach made by Seller of its representations and warranties in Sections 10.01 and 10.02;

(ii) Seller's failure to fulfill its obligations regarding Resource Adequacy Benefits as set forth in Sections 3.01 and 3.02;

(iii) NERC Standards Non-Compliance Penalties or an attempt by any Governmental Authority, person or entity to assess such NERC Standards Non-Compliance Penalties against SCE, except to the extent solely due to SCE's negligence in performing its role as Seller's Scheduling Coordinator throughout the Delivery Term;

(iv) injury or death to persons, including SCE employees, and physical damage to property, including SCE property, where the damage arises out of, is related to, or is in connection with, Seller's obligations or performance under this Agreement;

(v) injury or death to any person or damage to any property, including the personnel or property of SCE, to the extent that SCE would have been protected had Seller complied with all of the provisions of Section 10.11; *provided*, the inclusion of this Section 10.03(b)(v) is not intended to create any express or implied right in Seller to elect not to provide the insurance required under Section 10.11; or

(vi) any breach by Seller of the covenants set forth in Section 2.05(b).

This indemnity applies notwithstanding SCE's active or passive negligence. However, SCE will not be indemnified under Section 10.03(b)(i) through Section 10.03(b)(iv) for its loss, liability, damage, claim, cost, charge, demand or expense to the extent caused by its gross negligence or willful misconduct.

(c) Mutual Indemnification.

Each Party shall indemnify, defend and hold harmless the other Party and the other Party's directors, officers, employees, and agents, assigns, and successors in interest, from and against any and all loss, liability, damage, claim, cost, charge, demand, fine, penalty or expense of any kind or nature (including direct, indirect, or consequential loss, damage, claim, cost, charge, demand, or expense, including attorneys' fees (including costs of in-house counsel) and other costs of litigation, arbitration or mediation), arising out of or in connection with a Party's failure to pay any Governmental Charges for which such Party is responsible under Article Nine.

(d) Indemnification Claims.

All claims for indemnification by a Party entitled to be indemnified under this Agreement (an "Indemnified Party") by the other Party (the "Indemnitor") will be asserted and resolved as follows:

(i) If a claim or demand for which an Indemnified Party may claim indemnity is asserted against or sought to be collected from an Indemnified Party by a third party, the Indemnified Party shall as promptly as practicable give Notice to the Indemnitor; *provided*, failure to provide this Notice will relieve Indemnitor only to the extent that the failure actually prejudices Indemnitor.

(ii) Indemnitor will have the right to control the defense and settlement of any claims in a manner not adverse to Indemnified Party but can not admit any liability or enter into any settlement without Indemnified Party's approval.

(iii) Indemnified Party may employ counsel at its own expense with respect to any claims or demands asserted or sought to be collected against it; *provided*, if counsel is employed due to a conflict of interest or because Indemnitor does not assume control of the defense, Indemnitor will bear the expense of this counsel.

(e) Survival of Indemnification Rights and Obligations.

All indemnity rights and obligations survive the termination of this Agreement for twelve (12) months.

10.04 Assignment.

(a) Except as provided in Section 10.05, neither Party can assign this Agreement or its rights hereunder without the prior written consent of the other Party, which consent shall not be unreasonably withheld.

(b) Any direct or indirect change of control of Seller (whether voluntary or by operation of law) will be deemed an assignment and will require the prior written consent of SCE, which consent shall not be unreasonably withheld.

10.05 Consent to Collateral Assignment.

Subject to the provisions of this Section 10.05, Seller has the right to assign this Agreement as collateral for any financing or refinancing of the Generating Facility; *provided*, Seller shall be responsible for SCE's reasonable costs associated with the preparation, review, execution and delivery of documents in connection with any such assignment, including without limitation attorneys' fees.

In connection with any financing or refinancing of the Generating Facility by Seller, SCE shall in good faith work with Seller and Lender to agree upon a consent to collateral assignment of this Agreement ("Collateral Assignment Agreement").

The Collateral Assignment Agreement must be in form and substance agreed to by SCE, Seller and Lender, and must include, among others, the following provisions:

(a) SCE shall give Notice of an Event of Default by Seller, to the person(s) to be specified by Lender in the Collateral Assignment Agreement, before exercising its right to terminate this Agreement as a result of such Event of Default;

(b) Following an Event of Default by Seller under this Agreement, SCE may require Seller or Lender to provide to SCE a report concerning:

(i) The status of efforts by Seller or Lender to develop a plan to cure the Event of Default;

(ii) Impediments to the cure plan or its development;

(iii) If a cure plan has been adopted, the status of the cure plan's implementation (including any modifications to the plan as well as the expected timeframe within which any cure is expected to be implemented); and

(iv) Any other information which SCE may reasonably require related to the development, implementation and timetable of the cure plan.

Seller or Lender must provide the report to SCE within ten (10) Business Days after Notice from SCE requesting the report. SCE will have no further right to require the report with respect to a particular Event of Default after that Event of Default has been cured;

(c) Lender will have the right to cure an Event of Default on behalf of Seller, only if Lender sends a written notice to SCE before the end of any cure period indicating Lender's intention to cure. Lender must remedy or cure the Event of Default within the cure period under this Agreement; *provided*, such cure period may, in SCE's sole discretion, be extended by no more than an additional one hundred eighty (180) days;

(d) Lender will have the right to consent before any termination of this Agreement which does not arise out of an Event of Default;

(e) Lender will receive prior Notice of and the right to approve material amendments to this Agreement, which approval will not be unreasonably withheld, delayed or conditioned;

(f) If Lender, directly or indirectly, takes possession of, or title to the Generating Facility (including possession by a receiver or title by foreclosure or deed in lieu of foreclosure), Lender must assume all of Seller's obligations arising under this Agreement and all related agreements (subject to such limits on liability as are mutually agreed to by Seller, SCE and Lender as set forth in the Collateral Assignment Agreement); *provided*, before such assumption, if SCE advises Lender that SCE will require that Lender cure (or cause to be cured)

any Event of Default existing as of the possession date in order to avoid the exercise by SCE (in its sole discretion) of SCE's right to terminate this Agreement with respect to such Event of Default, then Lender at its option, and in its sole discretion, may elect to either:

(i) Cause such Event of Default to be cured, or

(ii) Not assume this Agreement;

(g) If Lender elects to sell or transfer the Generating Facility (after Lender directly or indirectly, takes possession of, or title to the Generating Facility), or sale of the Generating Facility occurs through the actions of Lender (for example, a foreclosure sale where a third party is the buyer, or otherwise), then Lender must cause the transferee or buyer to assume all of Seller's obligations arising under this Agreement and all related agreements as a condition of the sale or transfer.

Such sale or transfer may be made only to an entity with a tangible net worth of at least thirty million dollars ($30,000,000) and at least three (3) years of experience operating a generating plant of similar technology and similar size; and

(h) If this Agreement is rejected in Seller's Bankruptcy or otherwise terminated in connection therewith and if Lender or its designee, directly or indirectly, takes possession of, or title to, the Generating Facility (including possession by a receiver or title by foreclosure or deed in lieu of foreclosure), Lender must itself or must cause its designee to promptly enter into a new agreement with SCE having substantially the same terms as this Agreement.

10.06 Abandonment.

Seller may not relinquish its possession and control of the Generating Facility without the prior written consent of SCE except under circumstances provided for in Sections 10.04 and 10.05.

For purposes of this Section 10.06, Seller will have been deemed to relinquish possession of the Generating Facility if Seller has ceased all activities related to Operation of the Generating Facility for a consecutive thirty (30) day period and such cessation is not a result of Force Majeure.

10.07 Governing Law.

THIS AGREEMENT AND THE RIGHTS AND DUTIES OF THE PARTIES HEREUNDER SHALL BE GOVERNED BY AND CONSTRUED, ENFORCED AND PERFORMED IN ACCORDANCE WITH THE LAWS OF THE STATE OF CALIFORNIA, WITHOUT REGARD TO PRINCIPLES OF CONFLICTS OF LAW. TO THE EXTENT ENFORCEABLE AT SUCH TIME, EACH PARTY WAIVES ITS RESPECTIVE RIGHT TO ANY JURY TRIAL WITH RESPECT TO

ANY LITIGATION ARISING UNDER OR IN CONNECTION WITH THIS AGREEMENT.

10.08 Notices.

All notices, requests, invoices, statements or payments must be made as specified in Exhibit C.

Notices (other than Forecasts, scheduling requests and curtailment (or equivalent) instructions) must, unless otherwise specified herein, be in writing and may be delivered by hand delivery, first class United States mail, overnight courier service, e-mail or facsimile. Notices of curtailment (or equivalent orders) may be oral or written and must be made in accordance with accepted industry practices for such notices.

Notice provided in accordance with this Section 10.08 will be deemed given as follows:

(a) Notice by facsimile or hand delivery will be deemed given at the close of business on the day actually received, if received during business hours on a Business Day, and otherwise will be deemed given at the close of business on the next Business Day;

(b) Notice by overnight United States mail or courier service will be deemed given on the next Business Day after such Notice was sent out;

(c) Notice by first class United States mail will be deemed given two (2) Business Days after the postmarked date;

(d) Notice of curtailment will be deemed given on the date and time made by SCE and will be effective immediately.

Notices will be effective on the date deemed given, unless a different date for the Notice to go into effect is stated in another section of this Agreement.

A Party may change its designated representatives, addresses and other contact information by providing Notice of same in accordance herewith.

All Notices, requests, invoices, statements or payments for this Generating Facility must reference the RAP ID.

10.09 General.

(a) This Agreement constitutes the entire agreement between the Parties relating to its subject matter.

(b) This Agreement will be considered for all purposes as prepared through the joint efforts of the Parties and may not be construed against one Party or the other as a result of the preparation, substitution, submission or other event of negotiation, drafting or execution hereof.

(c) Except to the extent provided for herein, no amendment or modification to this Agreement will be enforceable unless reduced to a writing signed by all Parties.

(d) This Agreement does not impart any rights enforceable by any third party (other than a permitted successor or assignee bound to this Agreement).

(e) Waiver by a Party of any default by the other Party may not be construed as a waiver of any other default.

(f) The term "including" when used in this Agreement is by way of example only and may not be considered in any way to be in limitation.

(g) The word "or" when used in this Agreement includes the meaning "and/or" unless the context unambiguously dictates otherwise.

(h) The headings used in this Agreement are for convenience and reference purposes only. Words having well-known technical or industry meanings have these meanings unless otherwise specifically defined in this Agreement.

(i) Where days are not specifically designated as Business Days, they will be considered as calendar days.

(j) This Agreement is binding on each Party's successors and permitted assigns.

(k) No provision of this Agreement is intended to contradict or supersede any applicable agreement covering transmission, distribution, metering, scheduling or interconnection. In the event of an apparent contradiction between this Agreement and any such agreement, the applicable agreement controls.

(l) Whenever this Agreement specifically refers to any law, tariff, government department or agency, regional reliability council, Transmission Provider, or credit rating agency, the Parties hereby agree that the reference also refers to any successor to such law, tariff or organization.

(m) SCE has assigned a RAP ID number to this Agreement for tracking purposes only.

(n) SCE's obligation to take and pay for electric energy produced by the Generating Facility, together with Green Attributes, Resource Adequacy Benefits and Capacity Attributes associated therewith, will not be affected by any change to or elimination of the RPS Legislation.

(o) The Parties acknowledge and agree that this Agreement and the transactions contemplated by this Agreement constitute a "forward contract" within the meaning of the Bankruptcy Code and that SCE and Seller are each "forward contract merchants" within the meaning of the Bankruptcy Code.

(p) This Agreement may be executed in one or more counterparts, each of which will be deemed to be an original of this Agreement and all of which, when

taken together, will be deemed to constitute one and the same agreement. The exchange of copies of this Agreement and of signature pages by facsimile transmission, Portable Document Format (i.e., PDF) or by other electronic means constitutes effective execution and delivery of this Agreement as to the Parties and may be used in lieu of the original Agreement for all purposes.

(q) Each Party shall act in good faith in its performance under this Agreement.

(r) All dollar amounts set forth in this Agreement are in U.S. dollars.

10.10 Confidentiality.

(a) Terms and Conditions of this Agreement.

Neither Party shall disclose Confidential Information to a third party, other than:

(i) To such Party's, or its upstream parents' (which, in the case of SCE, is Edison International), employees, Lenders, counsel, accountants, advisors or investors, in each case who have a need to know such information and have agreed to keep such terms confidential;

(ii) To potential Lenders with the consent of SCE, which consent will not be unreasonably withheld; *provided,* disclosure:

(1) Of cash flow and other financial projections to any potential Lender in connection with a potential loan or tax equity investment; or

(2) Of Confidential Information to potential Lenders with whom Seller has negotiated (but not necessarily executed) a term sheet or other similar written mutual understanding,

does not require SCE's consent, and provided further that, in each case such potential Lender has a need to know this information and has agreed to keep such terms confidential;

(iii) By SCE, to SCE's Procurement Review Group, as defined in CPUC Decision 02-08-071, subject to any confidentiality agreements or laws, regulations or regulatory decisions concerning confidentiality which are applicable to SCE's Procurement Review Group;

(iv) By SCE, to the CPUC under seal for purposes of review subject to SCE making reasonable efforts to obtain confidentiality protection from the CPUC under Section 583 of the California Public Utilities Code or other statute, order or rule offering comparable confidentiality protection;

(v) To the CAISO or as otherwise may reasonably be required in order to participate in any auction, market or other process pertaining to the

allocation of priorities or rights related to the transmission of electric energy sold or to be sold to SCE hereunder;

(vi) In order to comply with any Applicable Law or any exchange, control area or CAISO rule, or order issued by a court or entity with competent jurisdiction over the Party making a disclosure of Confidential Information (the "Disclosing Party"), other than to those entities set forth in Section 10.10(a)(vii);

(vii) In order to comply with any applicable regulation, rule, or order of the CPUC, CEC, FERC, any court, administrative agency, legislative body or other tribunal, or any mandatory discovery or data request of a party to any proceeding pending before any of the foregoing;

(viii) To any governmental body, the CPUC, the CAISO or any local control area or regional authority having jurisdiction in order to support SCE's resource adequacy requirement showings, if applicable; *provided,* SCE shall, to the extent reasonable, use reasonable efforts to limit the ability of any such applicable governmental body, CAISO, local control area or regional authority to further disclose such information;

(ix) As may reasonably be required to participate in the WREGIS or other process recognized under Applicable Laws for the registration, transfer or ownership of Green Attributes associated with the Generating Facility;

(x) To representatives of a Party's credit ratings agencies:

(1) Who have a need to review the terms and conditions of this Agreement for the purpose of assisting the Party in evaluating this Agreement for credit rating purposes and have agreed to keep this information confidential; or

(2) With respect to the potential impact of this Agreement on the Party's financial reporting obligations;

(xi) Disclosure of terms specified in and pursuant to Section 10.10(c);

(xii) In connection with discovery requests or orders pertaining to the non-public terms of this Agreement as referenced in Sections 10.10(a)(vi) and 10.10(a)(vii) ("Disclosure Order") each Party shall, to the extent practicable, use reasonable efforts to:

(1) Notify the other Party before disclosing the Confidential Information; and

(2) Prevent or limit such disclosure.

After using such reasonable efforts, the Disclosing Party will not be:

(3) Prohibited from complying with a Disclosure Order; or

(4) Liable to the other Party for monetary or other damages incurred in connection with the disclosure of the Confidential Information.

Except as provided in the preceding sentence, the Parties are entitled to all remedies available at law or in equity to enforce, or seek relief in connection with this confidentiality obligation.

(b) Non-Disclosure Agreement.

(i) The Non-Disclosure Agreement between the Parties attached hereto as Exhibit I is incorporated herein (the "Non-Disclosure Agreement"), and the termination date of that agreement is modified such that it will terminate on the later of:

(1) The termination of the Non-Disclosure Agreement; or

(2) One year after the date of termination of this Agreement.

Information provided by the Parties pursuant to this Agreement will be subject to the Non-Disclosure Agreement, or to any other agreement that the Parties negotiate to provide reasonable protection for their confidential business information or trade secrets.

(ii) Notwithstanding Section 1 of the Non-Disclosure Agreement, the term "Confidential Information" as used in the Non-Disclosure Agreement (and incorporated herein) shall be deemed to include (in addition to the information described in the Non-Disclosure Agreement) this Agreement and all oral or written communications exchanged between the Parties pursuant to this Agreement, except for communications and information described in Section 4 of the Non-Disclosure Agreement.

(iii) Confidential Information may only be used for the purposes set forth under the Non-Disclosure Agreement and for the purpose of implementing and enforcing this Agreement.

(c) RPS Confidentiality.

Notwithstanding Section 10.10(a), at any time on or after the Effective Date, either Party shall be permitted to disclose the following terms with respect to this Agreement:

(i) Party names;

(ii) ERR type;

(iii) Term;

(iv) Generating Facility location;

(v) Contract Capacity;

(vi) Forecasted Commercial Operation Date;

(vii) Delivery Point; and

(viii) Generating Facility's expected energy deliveries.

10.11 Insurance.

(a) Starting on the Effective Date and throughout the Delivery Term of this Agreement and for such additional periods as may be specified below, Seller shall, at its own expense, provide and maintain in effect the insurance policies and minimum limits of coverage specified below, and such additional coverage as may be required by applicable law, with insurance companies which are authorized to do business in the state in which the services are to be performed and which have an A.M. Best's Insurance Rating of not less than A-:VII. The minimum insurance requirements specified herein do not in any way limit or relieve Seller of any obligation assumed elsewhere in this Agreement, including, but not limited to, Seller's defense and indemnity obligations.

(i) Workers' Compensation Insurance with the statutory limits required by the state having jurisdiction over Seller's employees;

(ii) Employer's Liability Insurance with limits of not less than:

(1) Bodily injury by accident – One Million dollars ($1,000,000) each accident

(2) Bodily injury by disease – One Million dollars ($1,000,000) policy limit

(3) Bodily injury by disease – One Million dollars ($1,000,000) each employee

(iii) Commercial General Liability Insurance, (which, except with the prior written consent of SCE and subject to subsections 10.11(a)(iii)(1) and 10.11(a)(iii)(2) below, shall be written on an "occurrence," not a "claims-made" basis), covering all operations by or on behalf of Seller arising out of or connected with this Agreement, including coverage for bodily injury, broad form property damage, personal and advertising injury, products/completed operations, and contractual liability. Such insurance shall bear a combined single limit per occurrence and annual aggregate of not less than One Million dollars ($1,000,000), exclusive of defense costs, for all coverages. Such insurance shall contain standard cross-liability and severability of interest provisions.

If Seller elects, with SCE's written concurrence, to use a "claims made" form of Commercial General Liability Insurance, then the following additional requirements apply:

(1) The retroactive date of the policy must be prior to the Effective Date; and

(2) Either the coverage must be maintained for a period of not less than four (4) years after the Agreement terminates, or the policy must provide for a supplemental extended reporting period of not less than four (4) years after the Agreement terminates.

(iv) Commercial Automobile Liability Insurance covering bodily injury and property damage with a combined single limit of not less than One Million dollars ($1,000,000) per occurrence. Such insurance shall cover liability arising out of Seller's use of all owned (if any), non-owned and hired automobiles in the performance of the Agreement.

(v) Umbrella/Excess Liability Insurance, written on an "occurrence," not a "claims-made" basis, providing coverage excess of the underlying Employer's Liability, Commercial General Liability, and Commercial Automobile Liability insurance, on terms at least as broad as the underlying coverage, with limits of not less than Ten Million dollars ($10,000,000) per occurrence and in the annual aggregate. The insurance requirements of this Section 10.11 can be provided by any combination of Seller's primary and excess liability policies.

(b) The insurance required above shall apply as primary insurance to, without a right of contribution from, any other insurance maintained by or afforded to SCE, its subsidiaries and affiliates, and their respective officers, directors, shareholders, agents, and employees, regardless of any conflicting provision in Seller's policies to the contrary. To the extent permitted by law, Seller and its insurers shall be required to waive all rights of recovery from or subrogation against SCE, its subsidiaries and affiliates, and their respective officers, directors, shareholders, agents, employees and insurers. The Commercial General Liability and Umbrella/Excess Liability insurance required above shall name SCE, its subsidiaries and affiliates, and their respective officers, directors, shareholders, agents and employees, as additional insureds for liability arising out of Seller's construction, ownership or Operation of the Generating Facility.

(c) At the time this Agreement is executed, or within a reasonable time thereafter, and within a reasonable time after coverage is renewed or replaced, Seller shall furnish to SCE certificates of insurance evidencing the coverage required above, written on forms and with deductibles reasonably acceptable to SCE. All deductibles, co-insurance and self-insured retentions applicable to the insurance above shall be paid by Seller. All certificates of insurance shall note that the insurers issuing coverage shall endeavor to provide SCE with at least thirty (30) days' prior written notice in the event of cancellation of

coverage. SCE's receipt of certificates that do not comply with the requirements stated herein, or Seller's failure to provide certificates, shall not limit or relieve Seller of the duties and responsibility of maintaining insurance in compliance with the requirements in this Section 10.11 and shall not constitute a waiver of any of the requirements in this Section 10.11.

(d) If Seller fails to comply with any of the provisions of this Section 10.11, Seller, among other things and without restricting SCE's remedies under the law or otherwise, shall, at its own cost and expense, act as an insurer and provide insurance in accordance with the terms and conditions above. With respect to the required Commercial General Liability, Umbrella/Excess Liability and Commercial Automobile Liability insurance, Seller shall provide a current, full and complete defense to SCE, its subsidiaries and affiliates, and their respective officers, directors, shareholders, agents, employees, assigns, and successors in interest, in response to a third party claim in the same manner that an insurer would have, had the insurance been maintained in accordance with the terms and conditions set forth above.

10.12 Nondedication.

Notwithstanding any other provisions of this Agreement, neither Party dedicates any of the rights that are or may be derived from this Agreement or any part of its facilities involved in the performance of this Agreement to the public or to the service provided under this Agreement, and this service shall cease upon termination of this Agreement.

10.13 Mobile Sierra.

Absent the agreement of all Parties to the proposed change, the standard of review for changes to any rate, charge, classification, term or condition of this Agreement, whether proposed by a Party (to the extent that any waiver in subsection (b) below is unenforceable or ineffective as to such Party), a non-party or FERC acting sua sponte, shall be the 'public interest' standard of review set forth in United Gas Pipe Line Co. v. Mobile Gas Service Corp., 350 U.S. 332 (1956) and Federal Power Commission v. Sierra Pacific Power Co., 350 U.S. 348 (1956), and clarified by Morgan Stanley Capital Group, Inc. v. Public Util. Dist. No. 1 of Snohomish 554 U.S. 527 (2008).

Notwithstanding any provision of Agreement, and absent the prior written agreement of the Parties, each Party, to the fullest extent permitted by Applicable Laws, for itself and its respective successors and assigns, hereby also expressly and irrevocably waives any rights it can or may have, now or in the future, whether under Sections 205, 206, or 306 of the Federal Power Act or otherwise, to seek to obtain from FERC by any means, directly or indirectly (through complaint, investigation, supporting a third party seeking to obtain or otherwise), and each hereby covenants and agrees not at any time to seek to so obtain, an order from FERC changing any Section of this Agreement specifying any rate or other material economic terms and conditions agreed to by the Parties.

10.14 Simple Interest Payments.

Except as specifically provided in this Agreement, any outstanding and past due amounts owing and unpaid by either Party under the terms of this Agreement will be eligible to receive a Simple Interest Payment calculated using the Interest Rate for the number of days between the date due and the date paid.

10.15 Payments.

Payments to be made under this Agreement must be made by wire transfer.

10.16 Seller Ownership and Control of Generating Facility.

Seller agrees, that, in accordance with FERC Order No. 697, upon request of SCE, Seller shall submit a letter of concurrence in support of any affirmative statement by SCE that the contractual arrangement set forth in this Agreement does not transfer "ownership or control of generation capacity" from Seller to SCE as the term "ownership or control of generation capacity" is used in 18 CFR Section 35.42. Seller also agrees that it will not, in filings, if any, made subject to FERC Order Nos. 652 and 697, claim that the contractual arrangement set forth in this Agreement conveys ownership or control of generation capacity from Seller to SCE.

10.17 Required Material.

Seller acknowledges and agrees that, notwithstanding anything to the contrary set forth herein, any review, approval, request, or requirement of any Required Material shall mean only that such Required Material is acceptable to SCE solely for SCE's internal purposes and benefit, and will not in any way be construed to mean that such Required Material is accurate, suitable for its intended purpose, in compliance with any Applicable Law or other requirement, or endorsed for the benefit of any other party, including Seller. Further, Seller acknowledges and agrees that SCE shall have no liability to Seller or any other third party with respect to any Required Material so reviewed, approved, requested or required by SCE or on SCE's behalf.

**** End of ARTICLE TEN ****

ARTICLE ELEVEN. CHANGE IN ELECTRIC MARKET DESIGN

If a Change in CAISO Tariff renders this Agreement or any terms herein incapable of being performed or administered, then either Party, on Notice, may request the other Party to enter into negotiations to make the minimum changes to this Agreement necessary to make this Agreement capable of being performed and administered, while attempting to preserve to the maximum extent possible the benefits, burdens and obligations set forth in this Agreement as of the Effective Date.

Upon receipt of a Notice requesting negotiations, the Parties shall negotiate in good faith.

If the Parties are unable, within sixty (60) days after the sending of the Notice requesting negotiations, either to agree upon changes to this Agreement or to resolve issues relating to changes to this Agreement, then either Party may submit issues pertaining to changes to this Agreement to mediation and arbitration as provided in Article Twelve.

A change in cost will not in itself be deemed to render this Agreement or any terms therein incapable of being performed or administered, or constitute, or form the basis of, a Force Majeure Event.

**** End of ARTICLE ELEVEN ****

ARTICLE TWELVE. MEDIATION AND ARBITRATION

12.01 Dispute Resolution.

Other than requests for provisional relief under Section 12.04, any and all Disputes which the Parties have been unable to resolve by informal methods after undertaking a good faith effort to do so, must first be submitted to mediation under the procedures described in Section 12.02 below, and if the matter is not resolved through mediation, *then* for final and binding arbitration under the procedures described in Section 12.03 below.

The Parties waive any right to a jury and agree that there will be no interlocutory appellate relief (such as writs) available.

12.02 Mediation.

Either Party may initiate mediation by providing Notice to the other Party in accordance with Section 10.08 of a written request for mediation, setting forth a description of the Dispute and the relief requested.

The Parties will cooperate with one another in selecting the mediator ("Mediator") from the panel of neutrals from Judicial Arbitration and Mediation Services, Inc. ("JAMS"), its successor, or any other mutually acceptable non-JAMS Mediator, and in scheduling the time and place of the mediation.

Such selection and scheduling will be completed within forty-five (45) days after Notice of the request for mediation.

Unless otherwise agreed to by the Parties, the mediation will not be scheduled for a date that is greater than one hundred twenty (120) days from the date of Notice of the request for mediation.

The Parties covenant that they will participate in the mediation in good faith, and that they will share equally in its costs (other than each Party's individual attorneys' fees and costs related to the Party's participation in the mediation, which fees and costs will be borne by such Party).

All offers, promises, conduct and statements, whether oral or written, made in connection with or during the mediation by either of the Parties, their agents, representatives, employees, experts and attorneys, and by the Mediator or any of the Mediator's agents, representatives and employees, will not be subject to discovery and will be confidential, privileged and inadmissible for any purpose, including impeachment, in any arbitration or other proceeding between or involving the Parties, or either of them, *provided*, evidence that is otherwise admissible or discoverable will not be rendered inadmissible or non-discoverable as a result of its use in the mediation.

12.03 Arbitration.

Either Party may initiate binding arbitration with respect to the matters first submitted to mediation by providing Notice in accordance with Section 10.08 of a demand for binding arbitration before a single, neutral arbitrator (the "Arbitrator") at any time following the unsuccessful conclusion of the mediation provided for in Section 12.02, above.

The Parties will cooperate with one another in selecting the Arbitrator within sixty (60) days after Notice of the demand for arbitration and will further cooperate in scheduling the arbitration to commence no later than one hundred eighty (180) days from the date of Notice of the demand.

If, notwithstanding their good faith efforts, the Parties are unable to agree upon a mutually-acceptable Arbitrator, the Arbitrator will be appointed as provided for in California Code of Civil Procedure Section 1281.6.

To be qualified as an Arbitrator, each candidate must be a retired judge of a trial court of any state or federal court, or retired justice of any appellate or supreme court.

Unless otherwise agreed to by the Parties, the individual acting as the Mediator will be disqualified from serving as the Arbitrator in the dispute, although the Arbitrator may be another member of the JAMS panel of neutrals or such other panel of neutrals from which the Parties have agreed to select the Mediator.

Upon Notice of a Party's demand for binding arbitration, such Dispute submitted to arbitration, including the determination of the scope or applicability of this agreement to arbitrate, will be determined by binding arbitration before the Arbitrator, in accordance with the laws of the State of California, without regard to principles of conflicts of laws.

Except as provided for herein, the arbitration will be conducted by the Arbitrator in accordance with the rules and procedures for arbitration of complex business disputes for the organization with which the Arbitrator is associated.

Absent the existence of such rules and procedures, the arbitration will be conducted in accordance with the California Arbitration Act, California Code of Civil Procedure Section 1280 *et seq*. and California procedural law (including the Code of Civil Procedure, Civil Code, Evidence Code and Rules of Court, but excluding local rules).

Notwithstanding the rules and procedures that would otherwise apply to the arbitration, and unless the Parties agree to a different arrangement, the place of the arbitration will be in Los Angeles County, California.

Also notwithstanding the rules and procedures that would otherwise apply to the arbitration, and unless the Parties agree to a different arrangement, discovery will be limited as follows:

(a) Before discovery commences, the Parties shall exchange an initial disclosure of all documents and percipient witnesses which they intend to rely upon or

use at any arbitration proceeding (except for documents and witnesses to be used solely for impeachment);

(b) The initial disclosure will occur within thirty (30) days after the initial conference with the Arbitrator or at such time as the Arbitrator may order;

(c) Discovery may commence at any time after the Parties' initial disclosure;

(d) The Parties will not be permitted to propound any interrogatories or requests for admissions;

(e) Discovery will be limited to twenty-five (25) document requests (with no subparts), three (3) lay witness depositions, and three (3) expert witness depositions (unless the Arbitrator holds otherwise following a showing by the Party seeking the additional documents or depositions that the documents or depositions are critical for a fair resolution of the Dispute or that a Party has improperly withheld documents);

(f) Each Party is allowed a maximum of three (3) expert witnesses, excluding rebuttal experts;

(g) Within sixty (60) days after the initial disclosure, or at such other time as the Arbitrator may order, the Parties shall exchange a list of all experts upon which they intend to rely at the arbitration proceeding;

(h) Within thirty (30) days after the initial expert disclosure, the Parties may designate a maximum of two (2) rebuttal experts;

(i) Unless the Parties agree otherwise, all direct testimony will be in form of affidavits or declarations under penalty of perjury; and

(j) Each Party shall make available for cross examination at the arbitration hearing its witnesses whose direct testimony has been so submitted.

Subject to Article Seven, the Arbitrator will have the authority to grant any form of equitable or legal relief a Party might recover in a court action. The Parties acknowledge and agree that irreparable damage would occur if certain provisions of this Agreement are not performed in accordance with the terms of the Agreement, that money damages would not be a sufficient remedy for any breach of these provisions of this Agreement, and that the Parties shall be entitled, without the requirement of posting a bond or other security, to specific performance and injunctive or other equitable relief as a remedy for a breach of Section 2.05(b), 3.01, 3.02, 3.06(h), 3.09 or 10.10 of this Agreement.

Judgment on the award may be entered in any court having jurisdiction.

The Arbitrator must, in any award, allocate all of the costs of the binding arbitration (other than each Party's individual attorneys' fees and costs related to the Party's participation in the arbitration, which fees and costs will be borne by such Party),

including the fees of the Arbitrator and any expert witnesses, against the Party who did not prevail.

Until such award is made, however, the Parties will share equally in paying the costs of the arbitration.

At the conclusion of the arbitration hearing, the Arbitrator shall prepare in writing and provide to each Party a decision setting forth factual findings, legal analysis, and the reasons on which the Arbitrator's decision is based. The Arbitrator shall also have the authority to resolve claims or issues in advance of the arbitration hearing that would be appropriate for a California superior court judge to resolve in advance of trial. The Arbitrator shall not have the power to commit errors of law or fact, or to commit any abuse of discretion, that would constitute reversible error had the decision been rendered by a California superior court. The Arbitrator's decision may be vacated or corrected on appeal to a California court of competent jurisdiction for such error. Unless otherwise agreed to by the Parties, all proceedings before the Arbitrator shall be reported and transcribed by a certified court reporter, with each Party bearing one-half of the court reporter's fees.

12.04 Provisional Relief.

The Parties acknowledge and agree that irreparable damage would occur if certain provisions of this Agreement are not performed in accordance with the terms of this Agreement, that money damages would not be a sufficient remedy for any breach of these provisions of this Agreement, and that the Parties shall be entitled, without the requirement of posting a bond or other security, to seek a preliminary injunction, temporary restraining order, or other provisional relief as a remedy for a breach of Section 2.05(b), 3.01, 3.02, 3.06(h), 3.09 or 10.10 of this Agreement in any court of competent jurisdiction, notwithstanding the obligation to submit all other disputes (including all claims for monetary damages under this Agreement) to arbitration pursuant to Section 12.01. The Parties further acknowledge and agree that the results of the arbitration may be rendered ineffectual without the provisional relief.

Such a request for provisional relief does not waive a Party's right to seek other remedies for the breach of the provisions specified above in accordance with Section 12.01, notwithstanding any prohibition against claim-splitting or other similar doctrine. The other remedies that may be sought include specific performance and injunctive or other equitable relief, plus any other remedy specified in this Agreement for the breach of the provision, or if the Agreement does not specify a remedy for the breach, all other remedies available at law or equity to the Parties for the breach.

**** End of ARTICLE TWELVE ****

In WITNESS WHEREOF, the Parties have caused this Agreement to be duly executed as of the Effective Date first written:

ADERA SOLAR, LLC,

a Delaware limited liability company.

By: _____

DAN FIRESTONE
[Name]

BOARD MEMBER/ AUTHORIZED SIGNATORY
[Title]

Date: 9-20-13

SOUTHERN CALIFORNIA EDISON COMPANY,

a California corporation.

By: _____

Steven D. Eisenberg

Vice President, Energy Contracts

Date: 9-30-13

EXHIBITS

EXHIBIT A

Definitions

The following terms shall have the following meaning for purposes of this Agreement.

1. "AC" means alternating current.
2. "Accepted Compliance Costs" has the meaning set forth in Section 1.11.
3. "Actual Availability Report" means a report to be prepared by Seller in the form of Exhibit O containing the information described in Section 3.24.
4. "Actual Available Capacity" means the sum of the capacity, in MW, of all Current Inverters of the Generating Facility that were available at the end of the Settlement Interval, as indicated by the Actual Availability Report.
5. "Affiliate" means, with respect to a Party, any entity that, directly or indirectly, through one or more intermediaries, controls, or is controlled by, or is under common control with that Party.
6. "Agreement" has the meaning set forth in the Preamble.
7. "Annual Degradation Factor" has the meaning set forth in Section 1.01(i).
8. "Annual Energy Yield Factor" means the annual AC energy in kWh that is expected to be delivered to SCE per installed peak DC power in kW_{PDC} of Photovoltaic Modules.
9. "Applicable Laws" means all constitutions, treaties, laws, ordinances, rules, regulations, interpretations, permits, judgments, decrees, injunctions, writs and orders of any Governmental Authority that apply to either or both of the Parties, the Generating Facility or the terms of this Agreement.
10. "Arbitrator" has the meaning set forth in Article Twelve.
11. "Availability Incentive Payments" has the meaning set forth in the CAISO Tariff.
12. "Availability Standards" has the meaning set forth in the CAISO Tariff.
13. "Availability Workbook" has the meaning set forth in Exhibit O.
14. "Banked Curtailed Energy" means the sum of the cumulative quantity in any Term Year of Curtailed Product (i) that exceeds the Curtailment Cap for any Term Year and (ii) for which SCE paid the Product Price.
15. "Bankrupt" means with respect to any entity, such entity:
    (a) Files a petition or otherwise commences, authorizes or acquiesces in the commencement of a proceeding or cause of action under any bankruptcy, insolvency, reorganization or similar law, or has any such petition filed or commenced against it;

(b) Makes an assignment or any general arrangement for the benefit of creditors;

(c) Otherwise becomes bankrupt or insolvent (however evidenced);

(d) Has a liquidator, administrator, receiver, trustee, conservator or similar official appointed with respect to such entity or any substantial portion of its property or assets; or

(e) Is generally unable to pay its debts as they fall due.

16. "Bankruptcy Code" means the United States Bankruptcy Code (11 U.S.C. §101 *et seq*.), as amended, and any successor statute.

17. "Bid" has the meaning as set forth in the CAISO Tariff.

18. "Business Day" means any day except a Saturday, Sunday, a Federal Reserve Bank holiday, or the Friday following Thanksgiving. A Business Day begins at 8:00 a.m. and end at 5:00 p.m. local time for the Party sending the Notice or payment or performing a specified action.

19. "Business Practice Manuals" or "BPMs" has the meaning as set forth in the CAISO Tariff.

20. "Buyer" means Southern California Edison Company.

21. "CAISO" means the California Independent System Operator Corporation or successor entity.

22. "CAISO Approved Meter" means a CAISO approved revenue quality meter or meters, CAISO approved data processing gateway or remote intelligence gateway, telemetering equipment and data acquisition services sufficient for monitoring, recording and reporting, in real time, all electric energy produced by the Generating Facility less Station Use.

23. "CAISO-Controlled Grid" has the meaning as set forth in the CAISO Tariff.

24. "CAISO Costs" means the debits, costs, penalties and interest that are directly assigned by the CAISO to the CAISO Resource ID for the Generating Facility for, or attributable to, Scheduling or deliveries from the Generating Facility under this Agreement in each applicable Settlement Interval.

25. "CAISO Markets" has the meaning as set forth in the CAISO Tariff.

26. "CAISO Resource ID" means the number or name assigned by the CAISO to the CAISO Approved Meter.

27. "CAISO Revenues" means the credits and other payments incurred or received by SCE as a result of energy from the Generating Facility delivered to any CAISO administered market by Seller, including costs and revenues associated with CAISO dispatches, for each applicable Settlement Interval.

28. "CAISO Sanctions" means any sanctions directly assigned by the CAISO to the CAISO Resource ID for the Generating Facility or attributable to, Scheduling or

deliveries from the Generating Facility under this Agreement for each applicable Settlement Interval.

29. "CAISO Tariff" means the California Independent System Operator Corporation Operating Agreement and Tariff, Business Practice Manuals (BPMs), and Operating Procedures, including the rules, protocols, procedures and standards attached thereto, as the same may be amended or modified from time-to-time and approved by FERC.

30. "Calculation Period" has the meaning set forth in Section 3.07(a)(i).

31. "California Renewables Portfolio Standard" means the California Public Utilities Code Section 399.11, *et seq*.

32. "Capacity Attributes" means any and all current or future defined characteristics, certificates, tags, credits, ancillary service attributes, or accounting constructs, howsoever entitled, including any accounting construct counted toward any resource adequacy requirements, attributed to or associated with the Generating Facility or any unit of generating capacity of the Generating Facility throughout the Delivery Term.

33. "CEC" means the California Energy Commission.

34. "CEC Certification" means certification by the CEC that the Generating Facility is an ERR for purposes of the RPS Legislation and that all electric energy produced by the Generating Facility qualifies as generation from an ERR for purposes of the RPS Legislation.

35. "CEC Pre-Certification" means provisional certification of the proposed Generating Facility as an ERR by the CEC upon submission by a facility of a complete CEC-RPS-1B application and required supplemental information.

36. "CEC Verification" means verification by the CEC based on ongoing reporting by Seller that the Generating Facility is an ERR for purposes of the RPS Legislation and that all electric energy produced by the Generating Facility qualifies as generation from an ERR for purposes of the RPS Legislation.

37. "CFR" means the Code of Federal Regulations, as may be amended from time to time.

38. "Change in CAISO Tariff" means that, other than changes for the Market Redesign and Technology Update that became effective on April 1, 2009, the CAISO Tariff has been changed and such change has a material adverse impact on either Party, or the CAISO has been dissolved or replaced and any successor to the CAISO operates under rules, protocols, procedures or standards that differ in a material respect from the CAISO Tariff, after the Effective Date.

39. "Check Meter" means the SCE revenue-quality meter section or meter, which SCE may require at its discretion, as set forth in Section 3.08(b), and which will include those devices normally supplied by SCE or Seller under the applicable utility electric service requirements.

40. "Claiming Party" has the meaning set forth in Section 5.02.

41. "Collateral Assignment Agreement" has the meaning set forth in Section 10.05.

42. "Commercial Operation" is the status of the Generating Facility upon Seller's satisfaction of all of the conditions set forth in Section 2.03(b) and as of the Commercial Operation Date.

43. "Commercial Operation Date" has the meaning set forth in Section 2.03(b).

44. "Commercial Operation Deadline" has the meaning set forth in Section 1.04.

45. "Compliance Actions" has the meaning set forth in Section 1.11.

46. "Compliance Expenditure Cap" means the dollar amount set forth in Section 1.11.

47. "Confidential Information" has the meaning set forth in Section 10.10(b)(ii).

48. "Construction Permits" means any permits issued by the Governmental Authority having jurisdiction that grant Seller the authority to develop and construct the Generating Facility on the Site. Construction Permits include conditional use permit and authority to construct.

49. "Contract Capacity" means the lesser of (i) the amount of electric energy generating capacity, set forth in Section 1.01(h), that Seller commits to install at the Site and (ii) the Demonstrated Contract Capacity.

50. "Control Area" means the electric power system (or combination of electric power systems) under the operational control of the CAISO or any other electric power system under the operational control of another organization vested with authority comparable to that of the CAISO.

51. "Costs" means, with respect to the Non-Defaulting Party, brokerage fees, commissions, legal expenses and other similar third party transaction costs and expenses reasonably incurred by that Party in entering into any new arrangement which replaces this Agreement.

52. "CPUC" means the California Public Utilities Commission.

53. "CPUC Approval" means a final and non-appealable order of the CPUC, without conditions or modifications unacceptable to the Parties, or either of them, which contains the following terms:

    (a) Approves this Agreement in its entirety, including payments to be made by the Buyer, subject to CPUC review of the Buyer's administration of the Agreement; and

    (b) Finds that any procurement pursuant to this Agreement is procurement from an eligible renewable energy resource for purposes of determining Buyer's compliance with any obligation that it may have to procure eligible renewable energy resources pursuant to the California Renewables Portfolio Standard

(Public Utilities Code Section 399.11 *et seq.*), Decision 03-06-071, or other applicable law.

CPUC Approval will be deemed to have occurred on the date that a CPUC decision containing such findings becomes final and non-appealable.

54. "Credit Rating" means with respect to any entity, on the relevant date of determination, the respective ratings then assigned to such entity's unsecured, senior long-term debt or deposit obligations (not supported by third party credit enhancement) by S&P, Fitch or Moody's. If no rating is assigned to such entity's unsecured, senior long-term debt or deposit obligation by S&P, Fitch or Moody's, then "Credit Rating" means the general corporate credit rating or long-term issuer rating assigned by the other two ratings agencies.

55. "Current Inverters" means devices used to convert DC electric energy to AC electric energy.

56. "Curtailed Product" means energy that could have been delivered to the Delivery Point by Seller but which did not receive a Schedule in the CAISO Day-Ahead Market plus Real-Time Over-Schedule Generation Curtailment Quantity, and which Seller did not deliver to SCE. The amount of energy that could have been delivered will be determined in accordance with Section 3.23 and Exhibit L, "Sellers Estimate of Lost Output".

57. "Curtailed Product Payment" means the sum of all payments for Curtailed Product plus payments for OSGC Quantity, as set forth in Section 4.02.

58. "Curtailed Return Term" has the meaning set forth in Section 1.05(b)(ii).

59. "Curtailed Return Term Notice" has the meaning set forth in Section 1.05(b).

60. "Curtailment Cap" is the yearly quantity (Term Year), in MWh, set forth in Section 1.09.

61. "Daily Delay Liquidated Damages" has the meaning set forth in Section 3.06(c).

62. "Day-Ahead" has the meaning set forth in the CAISO Tariff.

63. "Day-Ahead Market" has the meaning set forth in the CAISO Tariff.

64. "Day-Ahead Price" means the CAISO Day-Ahead Market Locational Marginal Price in each applicable Settlement Interval for electric energy (including the energy, congestion and losses components) at the Generating Facility's PNode (as published by the CAISO) which is the pricing point used by the CAISO for settlements of this Generating Facility.

65. "DC" means direct current.

66. "DC Collection System" means the DC equipment, cables, components, devices and materials that interconnect the Photovoltaic Modules with the Current Inverters.

67. "Defaulting Party" has the meaning set forth in Section 6.01.

68. "Deliverability Network Upgrades" has the meaning forth in the CAISO Tariff.

69. "Delivery Point" means the point of delivery of Product to the CAISO-Controlled Grid, as specified in Section 1.01(f) and set forth in the single-line diagram of the CAISO-Controlled Grid interconnection set forth in Exhibit B.

70. "Delivery Term" means the period beginning with Initial Synchronization and continuing throughout the end of the Term.

71. "Demonstrated Contract Capacity" means the Generating Facility's total rated electric alternating current energy generating capacity, which will equal the lesser of:

    (a) The sum of the Inverter Block Unit Capacity of all Inverter Block Units in the Generating Facility; or

    (b) The continuous output power rating at the expected operating power factor of the step-up transformer that connects the Generating Facility to the Transmission Provider's system,

    as determined in accordance with Exhibit K.

72. "Demonstration Date" has the meaning set forth in Exhibit K.

73. "Development Security" has the meaning set forth in Section 3.06.

74. "Disclosing Party" has the meaning set forth in Section 10.10.

75. "Disclosure Order" has the meaning set forth in Section 10.10.

76. "Dispatch Instruction" has the meaning forth in the CAISO Tariff.

77. "Dispute" means any and all disputes, claims or controversies arising out of, relating to, concerning or pertaining to the terms of this Agreement, or to either Party's performance or failure of performance under this Agreement.

78. "Disqualified Stock" means any capital stock that, by its terms (or by the terms of any security into which such stock is convertible, or for which such stock is exchangeable, in each case at the option of the holder of the capital stock), or upon the happening of any event, matures or is mandatorily redeemable, pursuant to a sinking fund obligation or otherwise, or is redeemable at the option of the holder of the capital stock, in whole or in part, on or before the date that is ninety-one (91) days after the expiration of the Term of this Agreement.

79. "DLF" means a number that is a representation for all net electric energy losses or avoided losses, as filed by SCE at FERC, associated with the transmission of electric energy through the electric system from the high voltage side of the Generating Facility's substation bus bar to the interface with the CAISO-Controlled Grid, also known as the distribution loss factor.

80. "Early Termination Date" has the meaning set forth in Section 6.02.

81. "Effective Date" has the meaning set forth in the Preamble.

82. "Eligible Intermittent Resource Protocol" or "EIRP" means the CAISO's intermittent resource program initially established pursuant to the CAISO Tariff or any successor program that SCE determines accomplishes a similar purpose.

83. "Emergency" means:

    (a) An actual or imminent condition or situation which jeopardizes the integrity of Transmission Provider's electric system or the integrity of any other systems to which the Transmission Provider's electric system is connected, as determined by the Transmission Provider in its reasonable discretion, or any condition so defined and declared by the CAISO; or

    (b) An emergency condition as defined under an interconnection agreement and any abnormal interconnection or system condition that requires automatic or immediate manual action to prevent or limit loss of load or generation supply, that could adversely affect the reliability of the Transmission Provider's electric system or generation supply, that could adversely affect the reliability of any interconnected system, or that could otherwise pose a threat to public safety.

84. "Energy Communication Network" means the CAISO infrastructure network (data highway) used by all CAISO participants to exchange data to and from resources and CAISO.

85. "Energy Deviations" means the absolute value of the difference, in kWh, in any Settlement Interval between:

    (a) Forecast-Derived Energy; and

    (b) Metered Amounts plus Curtailed Product plus OSGC Quantity.

86. "Equitable Defense" means any bankruptcy, insolvency, reorganization or other laws affecting creditors' rights generally, and with regard to equitable remedies, the discretion of the court before which proceedings to obtain equitable remedies may be pending.

87. "ERR" has the meaning set forth in Section 10.02(b)(i).

88. "Event of Default" has the meaning set forth in Section 6.01.

89. "Event of Deficient Energy Deliveries" means any instance in which Seller fails to meet Seller's Energy Delivery Obligation as determined in accordance with Section 3.07(a)(ii), which failure results in Seller's obligation to pay the applicable Product Replacement Damage Amount.

90. "Expected Annual Net Energy Production" means the Generating Facility's expected annual Qualified Amounts, as calculated in accordance with Section 1.01(i).

91. "Expected Energy" has the meaning set forth in the CAISO Tariff.

92. "EZ Gen Hub SP-15" means the Existing Zone Generation Trading Hub for the geographical area in which the majority of SCE's service territory is located.

93. "Federal Funds Effective Rate" means the annual interest rate posted opposite the caption "Federal Funds (effective)" as set forth in the weekly statistical release as H.15 (519), or any successor publication, published by the Board of Governors of the Federal Reserve System.

94. "Federal Investment Tax Credit" means investment tax credit under Section 48 of the Internal Revenue Code as in effect from time-to-time throughout the Delivery Term or any successor or other provision providing for a federal tax credit determined by reference to capital investment in equipment used to produce renewable electric energy from solar energy resources for which Seller, as the owner of the Generating Facility, is eligible.

95. "Federal Production Tax Credit" means production tax credit under Section 45 of the Internal Revenue Code as in effect from time-to-time throughout the Delivery Term or any successor or other provision providing for a federal tax credit determined by reference to renewable electric energy produced from wind or other renewable energy resources for which Seller, as the owner of the Generating Facility, is eligible.

96. "Federal Tax Credit" means either Federal Investment Tax Credit or Federal Production Tax Credit.

97. "FERC" means the Federal Energy Regulatory Commission.

98. "Fitch" means Fitch Ratings Ltd. or its successor.

99. "Force Majeure" means any occurrence that was not anticipated as of the Effective Date that:

    (a) In whole or in part:

        (i) Delays a Party's performance under this Agreement;

        (ii) Causes a Party to be unable to perform its obligations; or

        (iii) Prevents a Party from complying with or satisfying the conditions of this Agreement;

    (b) Is not within the control of that Party; and

    (c) The Party has been unable to overcome by the exercise of due diligence, including an act of God, flood, drought, earthquake, storm, fire, pestilence, lightning and other natural catastrophes, epidemic, war, riot, civil disturbance or disobedience, terrorism, sabotage, strike or labor dispute, or actions or inactions of any Governmental Authority (including a change in Applicable Law but excluding Seller's compliance obligations as set forth in Section 3.20), or curtailment or reduction in deliveries at the direction of a Transmission Provider or the CAISO (except as set forth below).

    Force Majeure does not include:

    (d) The lack of wind, sun or other fuel source of an inherently intermittent nature;

(e) Reductions in generation from the Generating Facility resulting from ordinary wear and tear, deferred maintenance or Operator error;

(f) Curtailment or reduction in deliveries at the direction of a Transmission Provider or the CAISO when the basis of the curtailment or reduction in deliveries ordered by a Transmission Provider or the CAISO is congestion arising in the ordinary course of operations of the Transmission Provider's system or the CAISO-Controlled Grid, including congestion caused by outages or capacity reductions for maintenance, construction or repair; or

(g) Any delay in providing, or cancellation of, interconnection service by a Transmission Provider, except to the extent such delay or cancellation is the result of a force majeure claimed by the Transmission Provider.

100. "Forecast" means an hourly forecast provided in accordance with Exhibit D of either:

(a) The sum of the continuous electrical output ratings for Current Inverters (in MW) in the Generating Facility that are operational; or

(b) The sum of electric energy (in MWh) expected to be generated by the Generating Facility,

in accordance with SCE instructions.

101. "Forecast-Derived Energy" means the amount of energy in MWh expected to be generated by the Generating Facility, as determined by SCE based upon the Forecast provided by Seller in accordance with this Agreement, and as may be adjusted for any additional energy that is available pursuant to an updated Forecast submitted in accordance with Exhibit D.

102. "Forecasted Commercial Operation Date" means the date Seller anticipates, as of the Effective Date, will be the Commercial Operation Date, as set forth in Section 1.03.

103. "Forecasted Initial Synchronization Date" means the date Seller anticipates, as of the Effective Date, will be the date for Initial Synchronization, as set forth in Section 1.02.

104. "Forecasting" means the action of Seller in preparing and submitting the Forecasts to SCE.

105. "Forward Settlement Amount" means the Non-Defaulting Party's Costs and Losses, on the one hand, netted against its Gains, on the other.

If the Non-Defaulting Party's Costs and Losses exceed its Gains, then the Forward Settlement Amount shall be an amount owing to the Non-Defaulting Party.

If the Non-Defaulting Party's Gains exceed its Costs and Losses, then the Forward Settlement Amount shall be Zero dollars ($0).

The Forward Settlement Amount does not include consequential, incidental, punitive, exemplary or indirect or business interruption damages.

106. "GAAP" means accounting principles generally accepted in the United States of America.

107. "Gains" means, with respect to any Party, an amount equal to the present value of the economic benefit to it, if any (exclusive of Costs), resulting from the termination of this Agreement for the remaining Term of this Agreement, determined in a commercially reasonable manner.

    Factors used in determining the economic benefit to a Party may include, without limitation, reference to information supplied by one or more third parties, which shall exclude Affiliates of the Non-Defaulting Party, including without limitation, quotations (either firm or indicative) of relevant rates, prices, yields, yield curves, volatilities, spreads or other relevant market data in the relevant markets, comparable transactions, forward price curves based on economic analysis of the relevant markets, settlement prices for comparable transactions at liquid trading hubs (e.g., NYMEX), all of which should be calculated for the remaining Term of this Agreement, and includes the value of Green Attributes, Capacity Attributes and Resource Adequacy Benefits, if any.

    Only if the Non-Defaulting Party is unable, after using commercially reasonable efforts, to obtain third party information to determine the gain of economic benefits, *then* the Non-Defaulting Party may use information available to it internally suitable for this purpose in accordance with prudent industry practices.

108. "Generating Facility" means the electric generating facility owned by Seller, as more particularly described in Exhibit B, together with all materials, equipment systems, structures, features and improvements necessary to produce electric energy at the facility, excluding the Site, land rights and interests in land.

109. "Generating Facility Energy Yield Curve" means a table used to estimate the Generating Facility's Metered Amounts, in kWh, as a function of the recorded plane of array insolation, in kWh per square meter, at the Site as described in Exhibit L.

110. "Generation Management System" or "GMS" means the automated system, or its successor system, employed by SCE real time operations to remotely monitor and dispatch the Generating Facility.

111. "Generation Operations Center" or "GOC" means the location of SCE's real time operations personnel.

112. "Generator Operator" means the entity that Operates the Generating Facility and performs the functions of supplying energy and interconnected operations services as described in the NERC Reliability Standards.

113. "Generator Operator Obligations" means the obligations of a Generator Operator as set forth in all applicable NERC Reliability Standards.

114. "Generator Owner" means an entity that owns the Generating Facility and has registered with NERC as the entity responsible for complying with those NERC

Reliability Standards applicable to owners of generating units as set forth in the NERC Reliability Standards.

115. "Generator Owner Obligations" means the obligations of a Generator Owner as set forth in all applicable NERC Reliability Standards.

116. "Governmental Authority" means:

(a) Any federal, state, local, municipal or other government;

(b) Any governmental, regulatory or administrative agency, commission, or other authority lawfully exercising or entitled to exercise any administrative, executive, judicial, legislative, police, regulatory or taxing authority or power; or

(c) Any court or governmental tribunal.

117. "Governmental Charges" has the meaning as set forth in Section 9.02.

118. "Green Attributes" means any and all credits, benefits, emissions reductions, offsets, and allowances, howsoever entitled, attributable to the generation from the Project, and its avoided emission of pollutants. Green Attributes include but are not limited to Renewable Energy Credits, as well as:

(1) Any avoided emission of pollutants to the air, soil or water such as sulfur oxides (SO_x), nitrogen oxides (NO_x), carbon monoxide (CO) and other pollutants;

(2) Any avoided emissions of carbon dioxide (CO_2), methane (CH_4), nitrous oxide, hydrofluorocarbons, perfluorocarbons, sulfur hexafluoride and other greenhouse gases (GHGs) that have been determined by the United Nations Intergovernmental Panel on Climate Change, or otherwise by law, to contribute to the actual or potential threat of altering the Earth's climate by trapping heat in the atmosphere;[1]

(3) The reporting rights to these avoided emissions, such as Green Tag Reporting Rights.

Green Tag Reporting Rights are the right of a Green Tag Purchaser to report the ownership of accumulated Green Tags in compliance with federal or state law, if applicable, and to a federal or state agency or any other party at the Green Tag Purchaser's discretion, and include without limitation those Green Tag Reporting Rights accruing under Section 1605(b) of The Energy Policy Act of 1992 and any present or future federal, state, or local law, regulation or bill, and international or foreign emissions trading program. Green Tags are accumulated on a MWh basis and

[1] Avoided emissions may or may not have any value for GHG compliance purposes. Although avoided emissions are included in the list of Green Attributes, this inclusion does not create any right to use those avoided emissions to comply with any GHG regulatory program.

one Green Tag represents the Green Attributes associated with one (1) MWh of energy.

Green Attributes do not include:

(i) Any energy, capacity, reliability or other power attributes from the Project,

(ii) Production tax credits associated with the construction or operation of the Project and other financial incentives in the form of credits, reductions, or allowances associated with the Project that are applicable to a state or federal income taxation obligation,

(iii) Fuel-related subsidies or "tipping fees" that may be paid to Seller to accept certain fuels, or local subsidies received by the generator for the destruction of particular preexisting pollutants or the promotion of local environmental benefits, or

(iv) Emission reduction credits encumbered or used by the Project for compliance with local, state, or federal operating and/or air quality permits.

If the Project is a biomass or biogas facility and Seller receives any tradable Green Attributes based on the greenhouse gas reduction benefits or other emission offsets attributed to its fuel usage, it shall provide Buyer with sufficient Green Attributes to ensure that there are zero net emissions associated with the production of electricity from the Project.

119. "Green Market Price" means the market price for energy and Green Attributes from an ERR.

120. "IE Annual Energy Yield Factor Report" means the report prepared by an independent engineer selected by Seller, and approved by SCE in its reasonable discretion, the cost of which shall be borne solely by Seller, which report shall state the projected actual Annual Energy Yield Factor.

121. "Indemnified Party" has the meaning set forth in Section 10.03(d).

122. "Indemnitor" has the meaning set forth in Section 10.03(d).

123. "Initial Synchronization" means the first generating unit of the Generating Facility is operating in parallel with Seller's Transmission Provider and the first kWh of electric energy is measured by the CAISO Approved Meter or Check Meter.

124. "Initial Synchronization Date" means the date upon which Initial Synchronization occurs.

125. "Installed DC Rating" means, at any time, the sum of the Photovoltaic Module DC Ratings for all Photovoltaic Modules actually installed at the Site and verified by SCE pursuant to Exhibit K, expressed in kW_{PDC}.

126. "Interconnection Point" means the location where the Generating Facility first interconnects with the existing electrical transmission or distribution system, as

reported on the Generating Facility's application for interconnection with the Transmission Provider's electric system, as described in Section 1.01(e).

127. "Interconnection Queue Position" is the order of Seller's valid request for interconnection relative to all other valid interconnection requests, as specified in Section 1.08.

128. "Interconnection Study" means any of the studies defined in the CAISO's Tariff or any Transmission Provider's tariff that reflect methodology and costs to interconnect the Generating Facility to the Transmission Provider's electric grid.

129. "Interest Rate" means, for any date:

(a) The per annum rate of interest equal to the "Prime Rate" published in *The Wall Street Journal* under "Money Rates" or such date (or if not published on such date on the most recent preceding day on which published); plus

(b) Two percentage points (2%);

provided, in no event may the Interest Rate exceed the maximum interest rate permitted by Applicable Laws.

130. "Inverter Block Unit" means each Current Inverter installed on the Site as part of the Generating Facility, along with the associated DC Collection Systems and Photovoltaic Modules connected to such Current Inverter.

131. "Inverter Block Unit Capacity" means, with respect to each Inverter Block Unit, the total rated electric alternating current energy generating capacity of such Inverter Block Unit, determined as the lesser of:

(a) The manufacturer's output rating of the Current Inverter included in such Inverter Block Unit, consistent with Prudent Electrical Practices and accepted industry standards, as indicated on the nameplate physically attached to such Current Inverter;

(b) The sum of the manufacturer's nameplate ratings of all Photovoltaic Modules included in such Inverter Block Unit, consistent with Prudent Electrical Practices and accepted industry standards, as indicated on the nameplates physically attached to such individual Photovoltaic Modules; or

(c) The continuous power output rating at the expected operating power factor of the Inverter Block Unit's medium voltage transformer.

132. "JAMS" has the meaning set forth in Article Twelve.

133. "kW" means a kilowatt of electric energy generating capacity.

134. "kWh" means a kilowatt-hour of electric energy.

135. "kW_{PDC}" means peak DC power.

136. "Lease" means one or more agreements whereby Seller leases the real property of the Site described in Section 1.01(b) from a third party, the term of which lease begins on

or before the commencement of construction of the Generating Facility and extends at least through the last day of the Term.

137. "Lender" means any financial institutions or successors in interest or assignees that provide(s) development, bridge, construction, permanent debt or tax equity financing or refinancing for the Generating Facility to Seller.

138. "Letter of Credit" means an irrevocable, nontransferable standby letter of credit, substantially in the form of Exhibit M and acceptable to SCE, provided by Seller from an issuer acceptable to SCE that is either a U.S. financial institution or commercial bank or a U.S. branch of a foreign bank with the financial institution or bank having a Credit Rating of at least (a) "A-" from S&P and Fitch, and "A3" from Moody's, if such entity is rated by all three ratings agencies; or (b) "A-" from S&P or Fitch, or "A3" from Moody's, if such entity is rated by only one or two of the ratings agencies. Seller must bear the costs of all Letters of Credit.

139. "Letter of Credit Default" means with respect to a Letter of Credit, the occurrence of any of the following events:

(a) The issuer of the Letter of Credit fails to comply with or perform its obligations under such Letter of Credit;

(b) The issuer of the Letter of Credit disaffirms, disclaims, repudiates or rejects, in whole or in part, or challenges the validity of, the Letter of Credit;

(c) The Letter of Credit fails or ceases to be in full force and effect at any time;

(d) Seller fails to provide an extended or replacement Letter of Credit prior to twenty (20) Business Days before the Letter of Credit expires or terminates;

(e) The issuer of the Letter of Credit becomes Bankrupt; or

(f) The issuer of a Letter of Credit fails to maintain a Credit Rating of at least (i) "A-" from S&P and Fitch, and "A3" from Moody's, if such entity is rated by all three ratings agencies; or (ii) "A-" from S&P or Fitch, or "A3" from Moody's, if such entity is rated by only one or two of the such ratings agencies;

provided, no Letter of Credit Default will occur or be continuing in any event with respect to a Letter of Credit after the time such Letter of Credit is required to be canceled or returned to a Party in accordance with the terms of this Agreement.

140. "Local Business Day" means a Business Day on which commercial banks are open for business in relation to any:

(a) Payment, in the place where the relevant account is located; and

(b) Notice or other communication, in the location specified in the address for notice provided by the recipient, except for the Friday immediately following the U.S. Thanksgiving holiday or a Federal Reserve Bank holiday.

141. "Locational Marginal Price" has the meaning set forth in the CAISO Tariff.

142. "Losses" means, with respect to any Party, an amount equal to the present value of the economic loss to it, if any (exclusive of Costs), resulting from termination of this Agreement for the remaining Term of this Agreement, determined in a commercially reasonable manner.

    Factors used in determining economic loss to a Party may include, without limitation, reference to information supplied by one or more third parties, which shall exclude Affiliates of the Non-Defaulting Party, including without limitation, quotations (either firm or indicative) of relevant rates, prices, yields, yield curves, volatilities, spreads or other relevant market data in the relevant markets, comparable transactions, forward price curves based on economic analysis of the relevant markets, settlement prices for comparable transactions at liquid trading hubs (e.g., NYMEX), all of which should be calculated for the remaining Term of this Agreement and must include the value of Green Attributes, Capacity Attributes and Resource Adequacy Benefits, if any.

    Only if the Non-Defaulting Party is unable, after using commercially reasonable efforts, to obtain third party information to determine the loss of economic benefits, then the Non-Defaulting Party may use information available to it internally suitable for these purposes in accordance with prudent industry practices.

143. "Lost Output" means the reduction in Qualified Amounts over the relevant measurement period that the Generating Facility was available to produce and could reasonably have been expected to deliver, based upon the calculation method set forth in Exhibit L, but was not delivered due to a Lost Output Event.

144. "Lost Output Event" means any of the following occurrences which cause Seller to be unable to deliver energy:

    (a) Force Majeure;

    (b) An Event of Default where SCE is the Defaulting Party;

    (c) A curtailment or reduction of deliveries in accordance with Section 3.12(g) or as otherwise ordered or caused by the CAISO, or SCE acting as a Transmission Provider (including without limitation a curtailment or reduction that does not constitute a Force Majeure as provided in subparagraph (f) of the definition of Force Majeure); or

    (d) An Emergency, to the extent not already covered in item (c) above.

145. "Lost Output Report" means the monthly report of Lost Output in the form of the worksheet from the Lost Output Workbook prepared in accordance with the procedures set forth in Section 3.23 and Exhibit L.

146. "Lost Output Workbook" has the meaning set forth in Exhibit L.

147. "Material Permits" means all permits required for Commercial Operation of the Generating Facility, as set forth on Exhibit G.

148. "Mediator" has the meaning set forth in Article Twelve.

149. "Meteorological Equipment" means the instruments and equipment that meet those specifications set forth in Exhibit P, as may be modified by SCE from time to time to reflect the CAISO's PIRP/EIRP protocol.

150. "Metered Amounts" means the electric energy expressed in kWh, as recorded by the CAISO Approved Meter(s), or Check Meter(s), as applicable.

151. "Milestone Schedule" means Seller's schedule to develop the Generating Facility as set forth in Exhibit G, including any revisions thereto in accordance with this Agreement.

152. "Moody's" means Moody's Investor Services, Inc.

153. "MRTU" means the Market Redesign and Technology Upgrade first implemented by CAISO in April 2009.

154. "MW" means a megawatt (or 1,000 kilowatts) of alternating current electric energy generating capacity.

155. "MWh" means a megawatt-hour (or 1,000 kilowatt-hours) of electric energy.

156. "NERC" means the North American Electric Reliability Corporation, or any successor thereto.

157. "NERC Reliability Standards" means those reliability standards applicable to the Generating Facility, or to the Generator Owner or the Generator Operator with respect to the Generating Facility, that are adopted by NERC and approved by the applicable regulatory authorities.

158. "NERC Standards Non-Compliance Penalties" means any and all monetary fines, penalties, damages, interest or assessments by the NERC, CAISO, WECC, a Governmental Authority or any entity acting at the direction of a Governmental Authority arising from or relating to a failure to perform the obligations of Generator Operator or Generator Owner as set forth in the NERC Reliability Standards.

159. "Non-Availability Charges" has the meaning set forth in the CAISO Tariff.

160. "Non-Defaulting Party" has the meaning set forth in Section 6.02.

161. "Non-Disclosure Agreement" has the meaning set forth in Section 10.10(b)(i).

162. "Notice" means notices, requests, statements or payments provided in accordance with Section 10.08 and Exhibit C.

163. "Notice of Non-Renewal" has the meaning set forth in Section 8.02(b)(iv)(2).

164. "OMAR" means the Operational Metering Analysis and Reporting System operated and maintained by the CAISO as the repository of settlement quality meter data or its successor.

165. "Operate", "Operated", "Operating" or "Operation" means to provide (or the provision of) all the operation, engineering, purchasing, repair, supervision, training, inspection, testing, protection, use, management, improvement, replacement, refurbishment, retirement, and maintenance activities associated with operating the Generating Facility in accordance with Prudent Electrical Practices.

166. "Operating Procedures" has the meaning as set forth in the CAISO Tariff.

167. "Original Term" has the meaning set forth in Section 1.05(a).

168. "Outage Schedule" has the meaning set forth in Section 3.15.

169. "Over-Schedule Generation Curtailment Order" or "OSGC Order" has the meaning set forth in Section 4.02(a)(ii).

170. "Over-Schedule Generation Curtailment Quantity" or "OSGC Quantity" has the meaning set forth in Section 4.02(a)(ii).

171. "Participating Intermittent Resource" means an intermittent resource generating facility that is certified, and remains certified, under PIRP as set forth in the CAISO Tariff.

172. "Participating Intermittent Resource Program" or "PIRP" means the CAISO's intermittent resource program initially established pursuant to Amendment No. 42 of the CAISO Tariff in Docket No. ER02-922-000 or any successor program that SCE determines accomplishes a similar purpose.

173. "Party" or "Parties" have the meaning set forth in the Preamble.

174. "Payment Invoices" are invoices issued by Seller during the Startup Period and Delivery Term detailing amounts owed by SCE to Seller or by Seller to SCE for energy deliveries, CAISO Revenues, CAISO Costs, CAISO Sanctions, SCE Penalties and other charges and adjustments as may be owed by the Parties, in accordance with Exhibit E.

175. "Performance Assurance" means collateral (in the amount of the Performance Assurance Amount set forth in Section 1.07) for Seller's performance under this Agreement in the form of cash or Letter(s) of Credit.

176. "Performance Assurance Amount" means the collateral amount for Performance Assurance set forth in Section 1.07.

177. "Performance Tolerance Band" has the meaning set forth in Exhibit N.

178. "Permit Approval" means approval by the relevant regulatory agencies of any Permit and shall be deemed obtained upon the issuance of such Permit, and shall not be invalidated by the pendency of an appeal or other post-issuance challenge to the issuance of the Permit.

179. "Permits" means all applications, approvals, authorizations, consents, filings, licenses, orders, permits or similar requirements imposed by any Governmental Authority, or the CAISO, in order to develop, construct, Operate, maintain, improve, refurbish and retire the Generating Facility or to Forecast or deliver the electric energy produced by the Generating Facility to SCE.

180. "Photovoltaic Module" means the individual module or component that produces DC electric energy from sun light.

181. "Photovoltaic Module DC Rating" means, for each Photovoltaic Module installed or to be installed at the Site, the number (expressed in kW_{PDC}) stated on the nameplate affixed thereto representing the manufacturer's maximum (at "peak" sunlight) DC power rating at the standard test condition ("P_{mp}" or Power maximum at peak).

182. "PNode" has the meaning set forth in the CAISO Tariff.

183. "Price Taker" has the meaning set forth in the CAISO Tariff.

184. "Product" has the meaning set forth in Section 1.01(d).

185. "Product Payment" has the meaning set forth in Exhibit E.

186. "Product Payment Allocation Factor" means the product payment allocation factors set forth in Exhibit J.

187. "Product Price" means the price set forth in Section 1.06.

188. "Product Replacement Damage Amount" has the meaning set forth in Section 3.07(b)(i).

189. "Project" means the Generating Facility.

190. "Prudent Electrical Practices" means those practices, methods and acts that would be implemented and followed by prudent operators of electric energy generating facilities in the Western United States, similar to the Generating Facility, during the relevant time period, which practices, methods and acts, in the exercise of prudent and responsible professional judgment in the light of the facts known or that should reasonably have been known at the time the decision was made, could reasonably have been expected to accomplish the desired result consistent with good business practices, reliability and safety.

    Prudent Electrical Practices shall include, at a minimum, those professionally responsible practices, methods and acts described in the preceding sentence that comply with manufacturers' warranties, restrictions in this Agreement, and the requirements of Governmental Authorities, WECC standards, the CAISO and Applicable Laws.

    Prudent Electrical Practices also includes taking reasonable steps to ensure that:

    (a) Equipment, materials, resources, and supplies, including spare parts inventories, are available to meet the Generating Facility's needs;

(b) Sufficient Operating personnel are available at all times and are adequately experienced and trained and licensed as necessary to Operate the Generating Facility properly and efficiently, and are capable of responding to reasonably foreseeable emergency conditions at the Generating Facility and Emergencies whether caused by events on or off the Site;

(c) Preventive, routine, and non-routine maintenance and repairs are performed on a basis that ensures reliable, long term and safe Operation of the Generating Facility, and are performed by knowledgeable, trained, and experienced personnel utilizing proper equipment and tools;

(d) Appropriate monitoring and testing are performed to ensure equipment is functioning as designed;

(e) Equipment is not Operated in a reckless manner, in violation of manufacturer's guidelines or in a manner unsafe to workers, the general public, or the Transmission Provider's electric system or contrary to environmental laws, permits or regulations or without regard to defined limitations such as, flood conditions, safety inspection requirements, operating voltage, current, volt ampere reactive (VAR) loading, frequency, rotational speed, polarity, synchronization, and control system limits; and

(f) Equipment and components are designed and manufactured to meet or exceed the standard of durability that is generally used for electric energy generating facilities operating in the Western United States and will function properly over the full range of ambient temperature and weather conditions reasonably expected to occur at the Site and under both normal and emergency conditions.

191. "Qualified Amounts" means the Metered Amounts, expressed in kWh, that qualify as renewable power under the requirements of the California Renewables Portfolio Standard, or which do not so qualify solely due to a change in RPS Legislation occurring after the Effective Date, notwithstanding Seller's compliance with Section 1.11.

192. "RAP ID" means the contract identification number set forth on the title page to this Agreement.

193. "Real-Time Availability" means Seller's cumulative available capacity of the Generating Facility on a real-time basis.

194. "Real-Time Market" has the meaning set forth in the CAISO Tariff.

195. "Real-Time Over-Schedule Generation Curtailment Order" or "RTOSGC Order" has the meaning set forth in Section 4.02(d)(ii).

196. "Real-Time Over-Schedule Generation Curtailment Quantity" or "RTOSGC Quantity" has the meaning set forth in Section 4.02(d)(ii).

197. "Real-Time Price" means the CAISO Real-Time Market Locational Marginal Price for electric energy in each applicable Settlement Interval (including the energy, congestion and losses components) at the Generating Facility's PNode (as published by the CAISO) which is the pricing point used by the CAISO for settlements of this Generating Facility.

198. "Renewable Energy Credit" or "REC" has the meaning set forth in CPUC Decision D.08-08-028, as such definition may be modified by the CPUC or Applicable Law from time to time.

199. "Required Material" means any permit, license, application, certification, design, specification, program, agreement, instrument, equipment, device, mechanism, or any other item in connection with the Generating Facility to be reviewed or approved by SCE or on SCE's behalf, or requested or required of Seller by SCE or on SCE's behalf, under this Agreement.

200. "Resource Adequacy Benefits" means the rights and privileges attached to the Generating Facility that satisfy any entity's resource adequacy obligations, as those obligations are set forth in any Resource Adequacy Rulings and shall include any local, zonal or otherwise locational attributes associated with the Generating Facility.

201. "Resource Adequacy Rulings" means CPUC Decisions 04-01-050, 04-10-035, 05-10-042, 06-06-064, 06-07-031 and any subsequent CPUC ruling or decision, or any other resource adequacy laws, rules or regulations enacted, adopted or promulgated by any applicable Governmental Authority, as such CPUC decisions, rulings, laws, rules or regulations may be amended or modified from time-to-time throughout the Delivery Term.

202. "Responsible Officer" means the chief financial officer, treasurer or any assistant treasurer of a Party or any employee of a Party designated by any of the foregoing.

203. "Restricted Period" has the meaning set forth in Section 2.05(b).

204. "RPS Legislation" means the State of California Renewable Portfolio Standard Program, as codified at California Public Utilities Code Section 399.11, *et seq*.

205. "S&P" means the Standard & Poor's Rating Group.

206. "SCE" has the meaning set forth in the Preamble.

207. "SCE Penalty" means the amount charged to Seller by SCE, in accordance with Exhibit N, for hours in a calendar month when Seller does not accurately provide availability information as set forth in Exhibit D.

208. "SCE's Projected Energy Forecast" has the meaning set forth in Exhibit D.

209. "Schedule," "Scheduled" or "Scheduling" means the action of SCE in submitting Bids to the CAISO and receiving all CAISO Markets results from the CAISO; *provided*, with respect to any Settlement Interval, a CAISO Market result where the

Generating Facility is instructed to deliver zero (0) MWh is not considered a "Schedule" for purposes of this Agreement.

210. "Scheduling Coordinator" or "SC" means an entity certified by the CAISO for the purposes of undertaking the functions specified by the CAISO Tariff.

211. "SEC" means the Securities and Exchange Commission.

212. "Security Interest" has the meaning set forth in Section 8.03.

213. "Seller" has the meaning set forth in the Preamble.

214. "Seller's Debt" means, without duplication, each of the following:

(a) All indebtedness of Seller for borrowed money;

(b) All obligations of Seller for the deferred purchase price of property or services which purchase price is due more than six months after the date of placing such property in service or taking delivery or title thereto or the completion of such services (other than trade payables not overdue by more than ninety (90) days incurred in the ordinary course of Seller's business);

(c) All obligations of Seller evidenced by notes, bonds, debentures, Disqualified Stock or other similar instruments;

(d) All obligations of Seller created or arising under any conditional sale or other title retention agreement with respect to property acquired by Seller (even though the rights and remedies of the seller or lender under such agreement in the event of default are limited to repossession or sale of such property);

(e) All monetary obligations of Seller under:

(i) A lease of any property (whether real, personal or mixed) by Seller as lessee that, in conformity with GAAP, is accounted for as a capital lease on the balance sheet of Seller;

(ii) A so-called synthetic, off-balance sheet or tax retention lease; or

(iii) An agreement for the use or possession of property creating obligations which do not appear on the balance sheet of Seller but which, upon the insolvency or bankruptcy of Seller, would be characterized as indebtedness of Seller (without regard to accounting treatment);

(f) All obligations, contingent or otherwise, of Seller under acceptance, letter of guaranty, letter of credit or similar facilities;

(g) All obligations of Seller with respect to any redeemable equity interests in Seller, including in the case of preferred stock at the greater of the voluntary or involuntary liquidation preference plus accrued and unpaid dividends;

(h) All obligations of Seller with respect to any swaps, caps or collar agreements or similar arrangements to hedge against fluctuations in interest rates or

currency exchange rates or the exchange of nominal interest obligations, either generally or under specific contingencies, in each case, valued at the aggregate net mark-to-market value;

(i) All indebtedness of others referred to in clauses (a) through (h) above guaranteed by Seller, or in effect guaranteed by Seller through an agreement:

(i) To pay or purchase such indebtedness or to advance or supply funds for the payment or purchase of such indebtedness;

(ii) To purchase, sell or lease (as lessee or lessor) property, or to purchase or sell services, primarily for the purpose of enabling the debtor to make payment of the indebtedness or to assure the holder of such indebtedness against loss;

(iii) To supply funds to or invest in the debtor (including any agreement to pay for property or services irrespective of whether such property is received or such services are rendered); or

(iv) Otherwise to assure a creditor against loss; and

(j) Without duplication of the foregoing, all indebtedness referred to in clauses (a) through (i) above secured by any lien on property (including accounts and contract rights) owned by Seller.

The outstanding amount of indebtedness as described above at any date will be the outstanding balance at such date of all unconditional obligations as described above and, with respect to contingent obligations as described above, the maximum liability upon the occurrence of the contingency giving rise to the obligation.

Notwithstanding the foregoing, the term "Seller's Debt" as used herein does not include Seller's obligations under this Agreement and the Lease (provided that such Lease does not constitute an obligation of Seller described in clause (e) of the first sentence of this definition).

215. "Seller's Energy Delivery Obligation" has the meaning set forth in Section 3.07(a)(i).

216. "Settlement Interval" means any one of the six ten (10) minute time intervals beginning on any hour and ending on the next hour (e.g. 12:00 to 12:10, 12:10 to 12:20, etc.).

217. "Simple Interest Payment" means a dollar amount calculated by multiplying the:

(a) Dollar amount on which the Simple Interest Payment is based; times

(b) Federal Funds Effective Rate or Interest Rate, as applicable; times

(c) The result of dividing the number of days in the calculation period by 360.

218. "Site" means the real property on which the Generating Facility is, or will be located, as further described in Section 1.01(b) and Exhibit B.

219. "Site Control" means that Seller shall:

    (a) Own the Site;

    (b) Be the lessee of the Site under a Lease;

    (c) Be the holder of a right-of-way grant or similar instrument with respect to the Site; or

    (d) Be the managing partner or other person or entity authorized to act in all matters relating to the control and Operation of the Site and the Generating Facility.

220. "Solar Resource Evaluation Report" means a final report concerning the electric energy producing potential of the Site prepared by an independent engineer which assesses the solar resource potential at the Site.

221. "Startup Period" means the period that begins at Initial Synchronization and ends at Commercial Operation Date.

222. "Station Use" means:

    (a) The electric energy produced by the Generating Facility that is used within the Generating Facility to power the lights, motors, control systems and other electrical loads that are necessary for Operation; and

    (b) The electric energy produced by the Generating Facility that is consumed within the Generating Facility's electric energy distribution system as losses.

223. "Supervisory Control and Data Acquisition" or "SCADA" has the meaning set forth in the CAISO Tariff.

224. "Supplemental Lost Output" has the meaning set forth in Section 3.23.

225. "Supplemental Lost Output Report" has the meaning set forth in Section 3.23.

226. "Telemetry System" means a system of electronic components that interconnects the Generating Facility, GMS and the CAISO as set forth in Section 3.08(e).

227. "Term" means the term of this Agreement as set forth in Section 1.05.

228. "Term Year" means a twelve (12) month period beginning on the first day of the calendar month following the Commercial Operation Date and each successive twelve (12) month period thereafter.

229. "Termination Payment" means the sum of all amounts owed by the Defaulting Party to the Non-Defaulting Party under this Agreement, less any amounts owed by the Non-Defaulting Party to the Defaulting Party determined as of the Early Termination Date.

230. "TOD Period(s)" means the time of delivery period(s) set forth in Exhibit J.

231. "TOD Period Product Payment" means a portion of a Product Payment based upon the time of delivery of Product and calculated in accordance with the formula set forth in Section 2.02 of Exhibit E.

232. "Total Term Project Revenues" means the sum of the estimated revenue for the entire Term, as calculated in the Seller's Revenue Calculator prepared by Seller and submitted to SCE.

233. "Trading Day" has the meaning set forth in the CAISO Tariff.

234. "Transmission Provider" means any entity or entities responsible for the interconnection of the Generating Facility with a Control Area or transmitting the Metered Amounts on behalf of Seller from the Generating Facility to the Delivery Point.

235. "Unawarded Energy" is the Forecast-Derived Energy in any hour of the applicable Trading Day for which hour no Schedule has been awarded in the Day-Ahead Market.

236. "Unincluded Capacity" has the meaning set forth in Section 3.06(g)(ii).

237. "Web Client" means a web-based system approved by SCE.

238. "WECC" means the Western Electricity Coordinating Council, the regional reliability council for the Western United States, Northwestern Mexico and Southwestern Canada.

239. "WMDVBE" has the meaning set forth in CPUC General Order 156.

240. "WREGIS" has the meaning set forth in Section 3.01(d)(iv).

**** End of EXHIBIT A ****

EXHIBIT B

Generating Facility and Site Description

Generating Facility Description.

Generating Facility (Project) Name: Chowchilla Solar Project

Generating Facility (Project Legal Owner): Adera Solar, LLC

Chowchilla Solar Project (Project) is a 20 Megawatt (MW) renewable solar photovoltaic (PV) generating station is located on approximately 200 acres in Chowchilla, California about 20 miles southeast of Merced and roughly 36 miles northwest of Fresno. The Project will be connected to the Pacific Gas and Electric Company's Le Grand-Dairyland 115 kV Transmission Line, approximately 6.5 miles from Le Grand Substation, Latitude: 37.120, Longitude: -120.311, in Madera County, California.

The Project consists of photovoltaic panels, and 25 800kW inverters, with a maximum generating capability of 20 MW located on approximately 200 acres in Madera County, California.

Generating Facility Equipment

The major components and manufacturers assumed for this Project are polycrystalline photovoltaic (PV) technology with fixed-tilt panels.

The major Project equipment and materials of the facility includes the following

- Photovoltaic (PV) Polycrystalline Panels – 88,340 Renesola Virtus II Modules 300w (JC300M-24/Ab), with a peak power of 300-watts DC, or an equivalent panel from a first-tier supplier
- 25 x 800kW grid-tie- rated, SMA Sunny Central 800 CP-US Inverters, or an equivalent inverter from a first-tier supplier
- PV System Supported over 4H10 Stands mounted on Pipe/Screw Pile Foundations
- Direct Current (DC) String Combiner Boxes
- Medium and High Voltage Transformers
- AC Sectionalizers
- Circuit Breakers and Disconnects
- Conductors

The technical information included in this document is the sole property of SOLAIREDIRECT
and cannot be disclosed to or used by any third party without prior written consent from SOLAIREDIRECT.
Drawings, diagrams, blueprints or plans validated for execution are marked as "APPROVED"

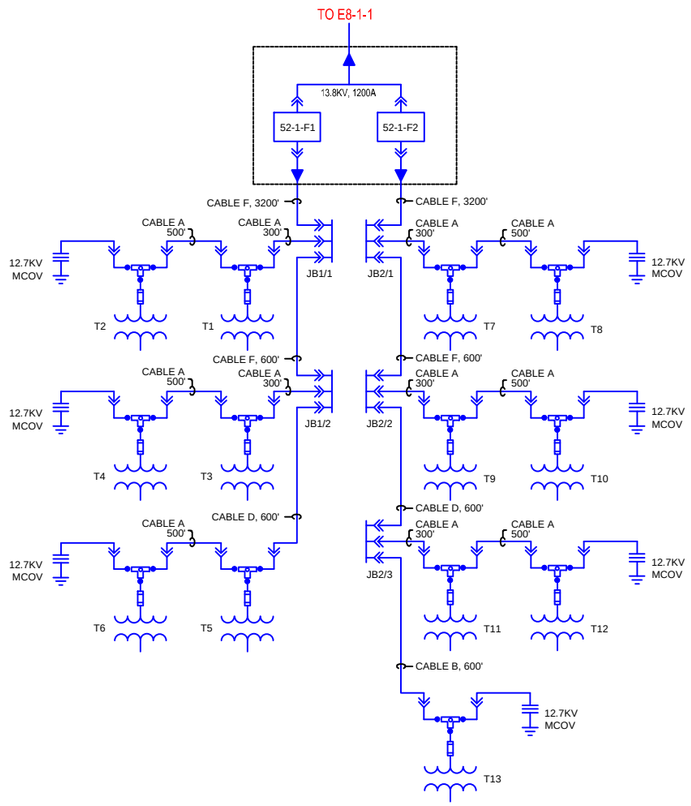

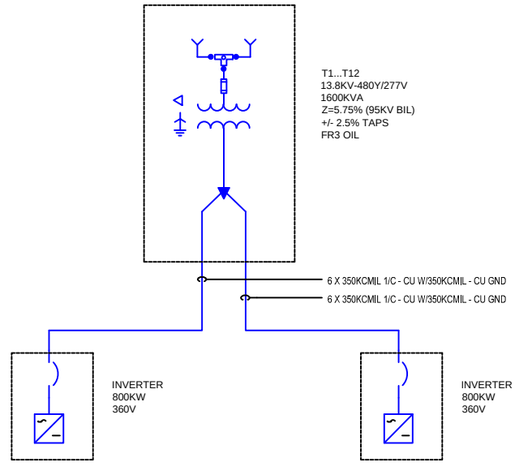

2 X 800KW INVERTER CONFIGURATION
(360V OUTPUT)
TYPICAL FOR T1 - T12

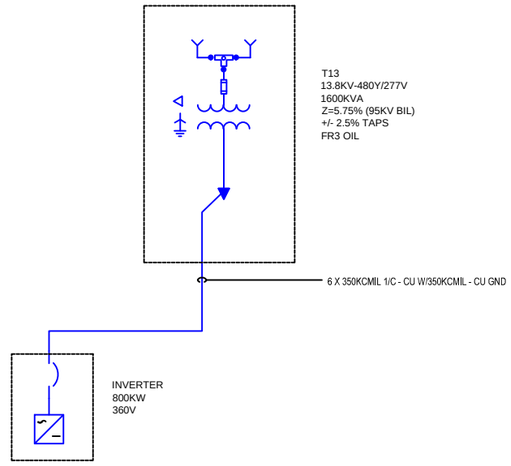

1 X 800KW INVERTER CONFIGURATION
(360V OUTPUT)
TYPICAL FOR T13

LEGEND

- DISCONNECT SWITCH
- 52 — POWER CIRCUIT BREAKER
- POWER TRANSFORMER
- PAD MOUNT, THREE PHASE, DEAD FRONT, TRANSFORMER WITH PRIMARY TEE SWITCH AND PRIMARY FUSE
- PAD MOUNT, THREE PHASE, THREE POINT JUNCTION ENCLOSURE, 15KV, 600AMP, NON-LOAD BREAK
- xxKV MCOV — METAL OXIDE SURGE ARRESTER
- SEPARABLE CONNECTOR
- UNDERGROUND CABLE TERMINATION BOLTED LUG
- CURRENT TRANSFORMER
- VOLTAGE TRANSFORMER
- REVENUE METERING — UTILITY INTERCONNECT CALISO REVENUE METERING PACKAGE
- LOW VOLTAGE POWER CIRCUIT BREAKER
- DC TO AC POWER INVERTER

CABLE TYPES

A - 3 X #2 AWG 1/C - AL W/#2/0-CU GND
B - 3 X 2/0 AWG 1/C - AL W/#2/0-CU GND
C - 3 X 250KCMIL 1/C - AL W/#2/0-CU GND
D - 3 X 500KCMIL 1/C - AL W/#2/0-CU GND
E - 3 X 750KCMIL 1/C - AL W/#2/0-CU GND
F - 3 X 1000KCMIL 1/C - AL W/#2/0-CU GND

PRELIMINARY

NOT FOR CONSTRUCTION

NOTES

1. SEE E8-2 FOR INVERTER CONNECTION ONE-LINE.
2. FINAL TRANSFORMER CONFIGURATION DEPENDENT ON UTILITY INTERCONNECTION REQUIREMENTS.

PREVIOUS FOLIO

NEXT FOLIO

REV.	DATE	MODIFICATION	STATUT	DESSINE	VERIF	APPR.	VALIDE
A	18/09/2013	FIRST ISSUE	EXE	CF	JLM	NL	

solairedirect
Tel: (33) 01 40 06 02 20
Fax: (33) 01 40 06 19 90
18 Rue du quatre septembre
75082 Cedex 02

ADERA SOLAR
CHOWCHILLA SOLAR
20MW PV SITE

SINGLE LINE DIAGRAM

PLAN N°. E8-1-2
FORMAT A3
ECHELLE: NA
REV. A
FICHIER: .DWG
PAGE: 02/4

The technical information included in this document is the sole property of SOLAIREDIRECT
and cannot be disclosed to or used by any third party without prior written consent from SOLAIREDIRECT.
Drawings, diagrams, blueprints or plans validated for execution are marked as "APPROVED"

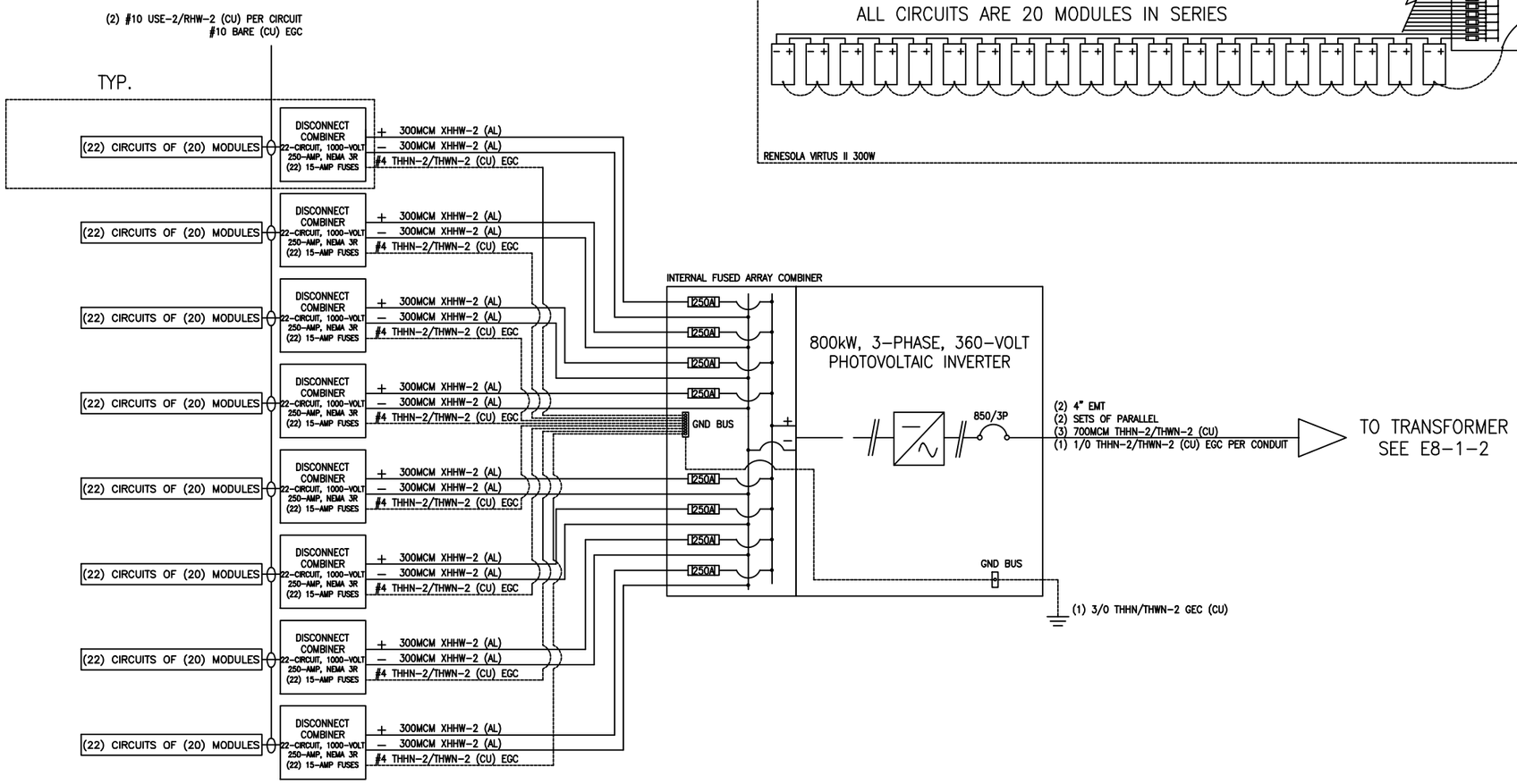

PRELIMINARY

NOT FOR CONSTRUCTION

NOTES

1. TYPICAL FOR T1 TO T12

PREVIOUS FOLIO

NEXT FOLIO

REV.	DATE	MODIFICATION	STATUT	DESSINE	VERIF	APPR.	VALIDE
A	18/09/2013	FIRST ISSUE	EXE	CF	JLM	NL	

solairedirect
Tel: (33) 01 40 06 02 20
Fax: (33) 01 40 06 19 90
18 Rue du quatre septembre
75082 Cedex 02

ADERA SOLAR
CHOWCHILLA SOLAR
20MW PV SITE

SINGLE LINE DIAGRAM

PLAN N°. E8-1-3/1
FORMAT A3
ECHELLE: NA
REV. A
FICHIER: .DWG
PAGE: 03/4

The technical information included in this document is the sole property of SOLAIREDIRECT
and cannot be disclosed to or used by any third party without prior written consent from SOLAIREDIRECT.
Drawings, diagrams, blueprints or plans validated for execution are marked as "APPROVED"

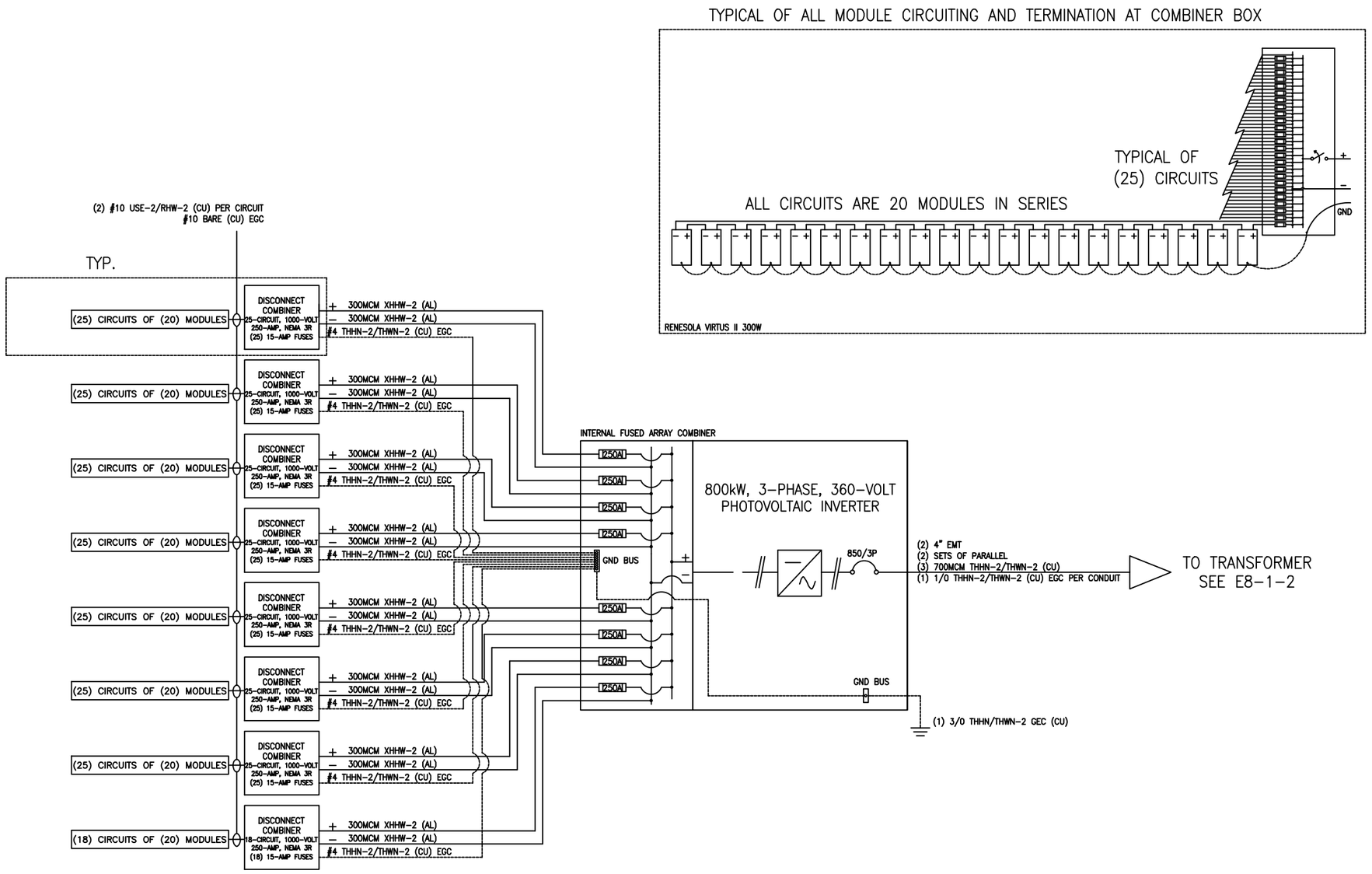

PRELIMINARY

NOT FOR CONSTRUCTION

NOTES

1. TYPICAL FOR T13

PREVIOUS FOLIO

NEXT FOLIO

REV.	DATE	MODIFICATION	STATUT	DESSINE	VERIF	APPR.	VALIDE
A	18/09/2013	FIRST ISSUE	EXE	CF	JLM	NL	

solairedirect
Tel: (33) 01 40 06 02 20
Fax: (33) 01 40 06 19 90
18 Rue du quatre septembre
75082 Cedex 02

ADERA SOLAR
CHOWCHILLA SOLAR
20MW PV SITE

SINGLE LINE DIAGRAM

PLAN N°. E8-1-3/2
FORMAT A3
ECHELLE: NA
REV. A
FICHIER: .DWG
PAGE: 04/4

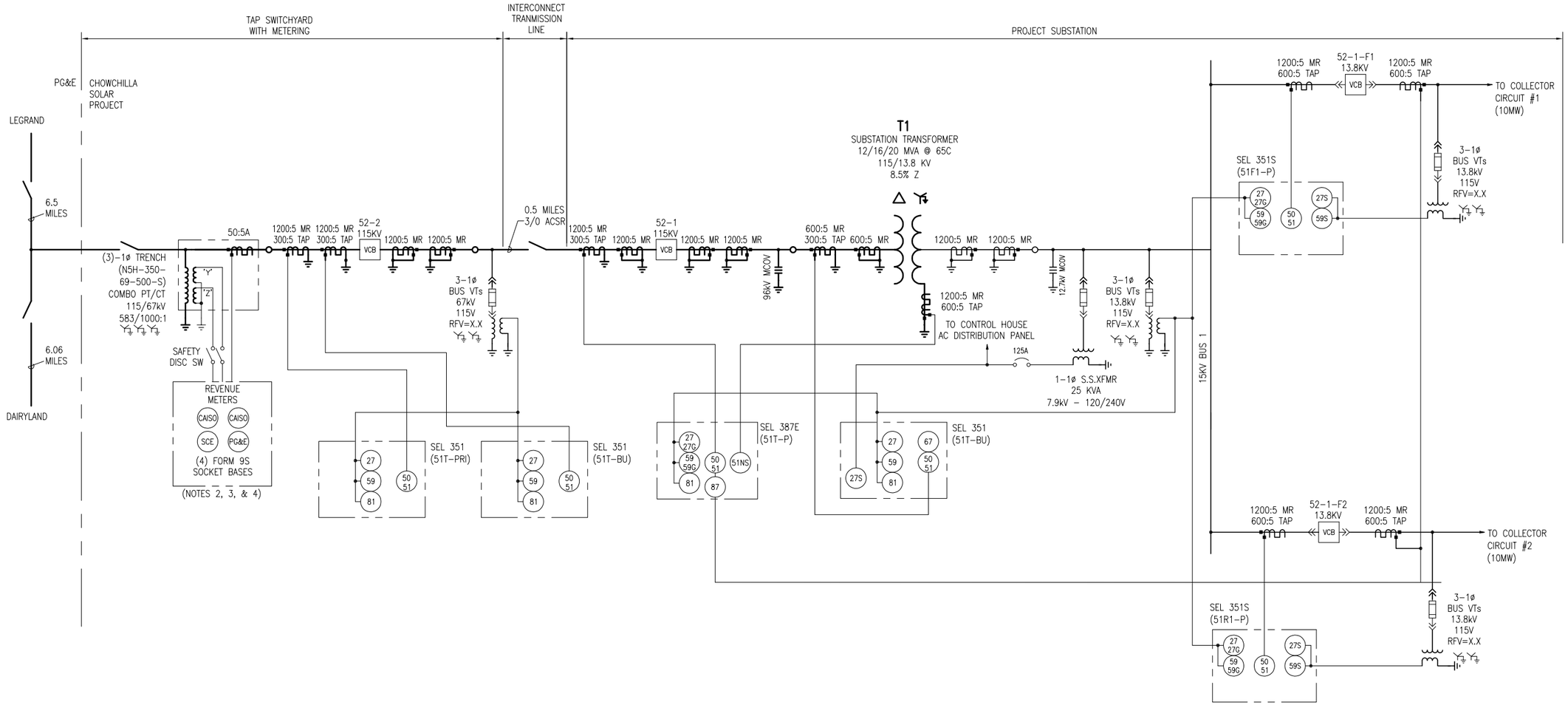

PRELIMINARY

NOT FOR CONSTRUCTION

NOTES

1. PROTECTIVE RELAYING SHOWN AS PRELIMINARY ONLY.
2. METERS TO BE HOUSED IN A CABINET SEPERATED BY FENCING TO LIMIT ACCESS TO THE REMAINDER OF THE SUBSTATION YARD.
3. MAXIMUM GENERATION = 20,000 KW.
4. AUXILIARY LOAD DURING NO GENERATION PERIODS = ~120 KW.

mgower R:\05 PEI_Open_Projects\120870\DD\DWG\04 Elec\Adera\94asE8-1-1.dwg Layout1 Jan 29, 2013 - 2:52pm

94asE8-1-1.dwg

THIS DRAWING WAS PREPARED BY POWER ENGINEERS, INC. FOR A SPECIFIC PROJECT, TAKING INTO CONSIDERATION THE SPECIFIC AND UNIQUE REQUIREMENTS OF THE PROJECT. REUSE OF THIS DRAWING OR ANY INFORMATION CONTAINED IN THIS DRAWING FOR ANY PURPOSE IS PROHIBITED UNLESS WRITTEN PERMISSION FROM BOTH POWER AND POWER'S CLIENT IS GRANTED.

REV	REVISIONS	DATE	DRN	DSGN	CKD	APPD	REFERENCE DRAWINGS	
C	UPDATED METERING	1/29/13	MAG	JJM				
B	ISSUED FOR APPENDIX B	2/27/12	MAG	JJM				
A	ISSUED FOR REVIEW	3/9/11	MAG	JJM	JJM		E8-1	OVERALL SYSTEM ONE LINE

DSGN	JJM	02/25/11
DRN	MAG	02/25/11
CKD	JJM	02/25/11

SCALE: NONE

FOR 22x34 DWG ONLY

POWER ENGINEERS www.powereng.com

Adera SOLAR

ADERA SOLAR, LLC

CHOWCHILLA SOLAR 20MW PV SITE

SINGLE LINE DIAGRAM

JOB NUMBER 120870

REV C

DRAWING NUMBER E8-1-1

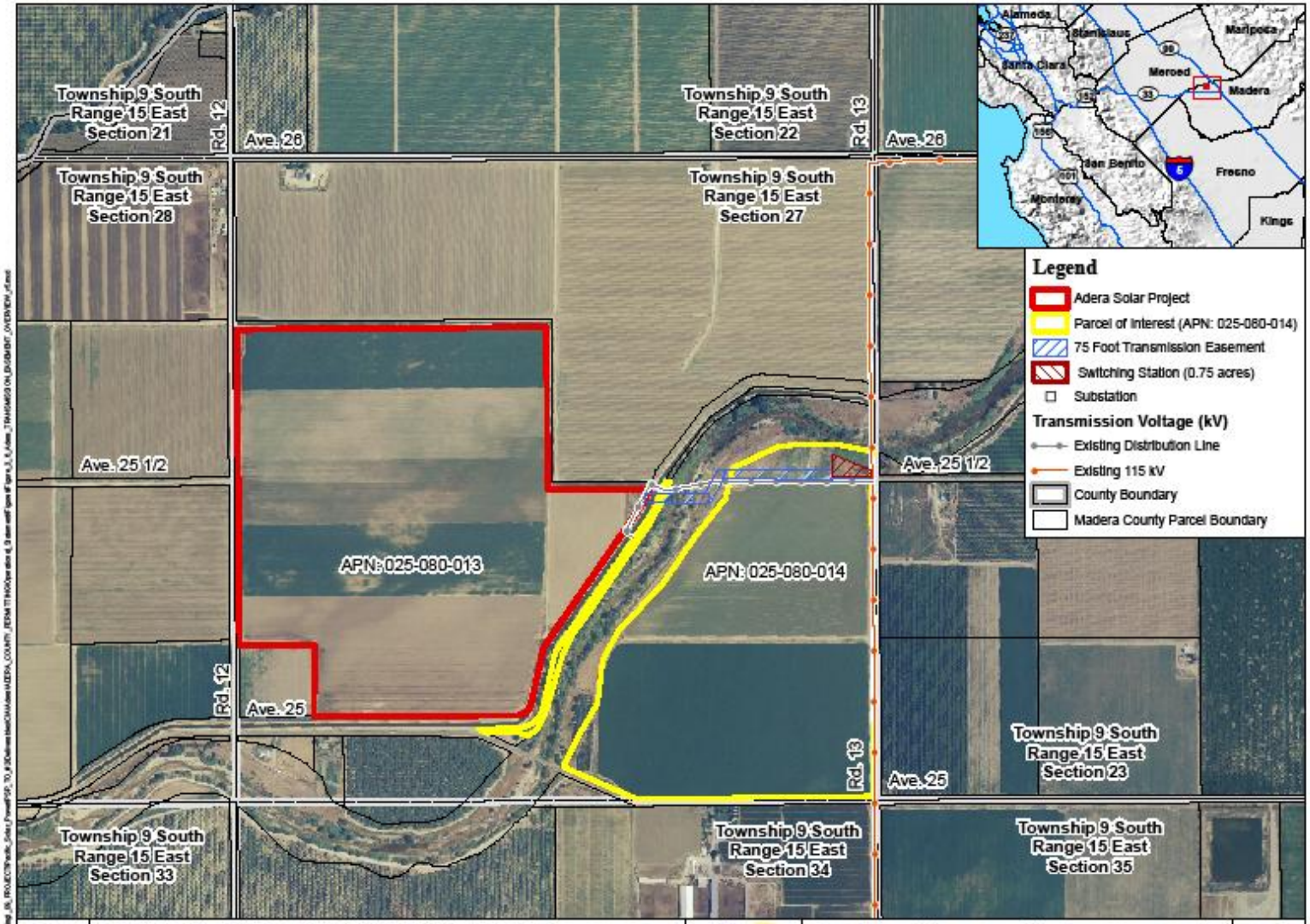

FIGURE 3-6
Adera Solar Project
TRANSMISSION EASEMENT OVERVIEW

Site Description.

The land referred to in this Commitment is situated in the UNINCORPORATED AREA, County of MADERA , State of CALIFORNIA, and is described as follows:

LOTS 9, 10, 11, 12, 19A, 20, 21, 22, 23, 24, 29A AND A PORTION OF LOTS 26, 27 AND 28 IN BLOCK 27 OF BLISS RANCH SUBDIVISION ACCORDING TO THE MAP ENTITLED "MAP OF BLISS RANCH SUBDIVISION", FILED AND RECORDED IN THE OFFICE OF THE COUNTY RECORDER OF SAID COUNTY RECORDED MARCH 13, 1920 IN VOL. 4 OF MAPS, AT PAGES 68 TO 82 INCLUSIVE, ALL LYING WEST OF THE CENTER LINE OF ASH SLOUGH;

EXCEPTING THEREFROM THE LAND DESCRIBED IN DEED TO THE CHOWCHILLA WATER DISTRICT RECORDED APRIL 7, 1961 AS INSTRUMENT NO. 4346 OF OFFICIAL RECORDS OFMADERA COUNTY, CALIFORNIA.

APN: 025-080-013

**** End of EXHIBIT B ****

EXHIBIT C

Notice List

ADERA SOLAR, LLC ("Seller")	**SOUTHERN CALIFORNIA EDISON COMPANY** ("SCE")
All Notices are deemed provided in accordance with Section 10.08 if made to the address and facsimile numbers provided below:	Unless otherwise specified, all Notices are deemed provided in accordance with Section 10.08 if made to the Contract Sponsor at the address or facsimile number provided below:
Contract Sponsor: Attn: David Saul CEO, Pacific Valley, LLC Street: 115 West Canon Perdido Street City: Santa Barbara, CA 93101 Phone: 702-289-4361 Facsimile: 805-284-9025	**Contract Sponsor:** Attn: Vice President, Energy Contracts Street: 2244 Walnut Grove Avenue City: Rosemead, California 91770 Phone: 626-302-4023 Facsimile: 626-302-9622
Reference Numbers: Duns: 06-856 1630 Federal Tax ID Number: 27-4504727	**Reference Numbers:** Duns: 006908818 Federal Tax ID Number: 95-1240335
Attn: David Saul Phone: 702-289-4361 Facsimile: 805-284-9025	**Contract Administration:** Attn: Director Energy Contracts, Contract Management Phone: 626-302-3126 Facsimile: 626-302-9622
Forecasting: Attn: Control Room Phone: Facsimile:	**Generation Operations Center:** Phone: 626-307-4487 or 626-307-4420 Phone: 626-302-6409 E-mail: preseched@sce.com

ADERA SOLAR, LLC ("Seller")	**SOUTHERN CALIFORNIA EDISON COMPANY** ("SCE")
Day-Ahead Forecasting: Phone:	**Day-Ahead Scheduling:** Manager. Attn: Manager of Day-Ahead Operations Phone: Facsimile: Scheduling Desk. Phone: 626-307-4425 Backup: 626-307-4420 Fax: 626-307-4416 E-mail: preseched@sce.com
Real-Time Forecasting: Phone:	**Real-Time Scheduling:** Manager. Attn: Manager of Real-Time Operations Phone: Facsimile: Operations Desk. Phone: 626-307-4405 Back-up: 626-307-4453 Fax: 626-307-4416 E-mail: realtime@sce.com
	Short Term Planning:
Payment Statements: Attn: Phone: Facsimile: E-mail:	**Payment Statements:** Attn: Power Procurement - Finance Phone: 626-302-3277 Facsimile: 626-302-3276 E-mail: PPFDPowerSettle@sce.com
CAISO Costs and CAISO Sanctions and SCE Penalties: Attn: Phone: Facsimile: E-mail:	**CAISO Costs, CAISO Sanctions and SCE Penalties:** Attn: Power Procurement - Finance Phone: 626-302-3277 Facsimile: 626-302-3276 E-mail: PPFDPowerSettle@sce.com

ADERA SOLAR, LLC ("Seller")	**SOUTHERN CALIFORNIA EDISON COMPANY** ("SCE")
Payments: Attn: Phone: Facsimile: E-mail:	**Payments:** Attn: Settlements & Operations Services Phone: 626-302-3277 Facsimile: 626-302-3276 E-mail: PPFDPowerSettle@sce.com
Wire Transfer: BNK: ABA: ACCT:	**Wire Transfer:** BNK: JP Morgan Chase Bank ABA: 02100021 ACCT: 323-394434
Credit and Collections: Attn: Phone: Facsimile: E-mail:	**Manager of Credit and Collateral:** Attn: Manager of Credit and Collateral Phone: 626-302-1129 Facsimile: 626-302-2517
With additional Notices of an Event of Default or Potential Event of Default to: Attn: Phone: Facsimile: E-mail:	**With additional Notices of an Event of Default or Potential Event of Default to:** Attn: Manager SCE Law Department Power Procurement Section Phone: 626-302-6897 Facsimile: 626-302-1935 E-mail: Beth.Fox@sce.com
Lender: Attn: Phone: Facsimile: E-mail:	

**** End of EXHIBIT C ***

EXHIBIT D

Forecasting and Scheduling Requirements and Procedures

1. Introduction.

The Parties shall abide by the Forecasting and Scheduling requirements and procedures described below and shall agree upon reasonable changes to these requirements and procedures from time-to-time, as necessary to:

(a) Comply with CAISO Tariff;

(b) Accommodate changes to their respective generation technology and organizational structure; and

(c) Address changes in the operating and Scheduling procedures of both SCE and the CAISO, including but not limited to, automated forecast and outage submissions.

2. Seller's Forecasting Requirements.

Seller must meet all of the following requirements for Forecasting as specified below.

(a) No later than thirty (30) days before any day designated for Initial Synchronization, Seller shall provide SCE, via the Web Client, with a 30-day, hourly Forecast of either or both:

(i) Capacity, in MW; or

(ii) Electric energy, in MWh

as directed by SCE, for the thirty (30) day period commencing on Initial Synchronization.

(b) If, after submitting the Forecast pursuant to Item 2(a), Seller learns that Initial Synchronization will occur on a date and time other than that reflected on the Forecast, Seller shall provide an updated Forecast reflecting the new Initial Synchronization Date at the earliest practicable time but no later than 5:00 p.m. Pacific Prevailing Time ("PPT") on the Wednesday before the revised Initial Synchronization Date, if Seller has learned of the new Initial Synchronization Date by that time, but in no event less than three (3) Business Days before the actual Initial Synchronization Date.

(c) If the Web Client becomes unavailable, Seller shall provide SCE with the Forecast by e-mailing SCE.

(d) The Forecast, and any updated Forecasts provided pursuant to this Item 2, must:

(i) Not include any anticipated or expected electric energy losses after the CAISO Approved Meter or Check Meter; and

(ii) Limit hour-to-hour Forecast changes to no less than two hundred fifty (250) kWh or 0.25 MWh, as applicable, during any period when the Web Client is unavailable. Seller shall have no restriction on hour-to-hour Forecast changes when the Web Client is available.

(e) Commencing on or before 5:00 p.m. PPT of the Wednesday before the first week covered by the Forecast provided pursuant to Item 2(a) above and on or before 5:00 p.m. PPT every Wednesday thereafter until the end of the Delivery Term, Seller shall update the Forecast for the thirty (30) day period commencing on the Sunday following the weekly Wednesday Forecast update submission. Seller shall use the Web Client, if available, to supply this weekly update or, if the Web Client is not available, Seller shall provide SCE with the weekly Forecast update by e-mailing SCE.

(f) Forecasting Electric Energy.

If Seller is Forecasting electric energy, in accordance with SCE's instructions, and Seller learns of any change in the total electrical energy output of the Generating Facility for a period covered by the most recent Forecast update resulting from any cause, including an unplanned outage, before the time that the next weekly update of the Forecast is due which results in variance in expected energy in any hour of plus (+) or minus (-) three percent (3%) from the energy reported in the most recent Forecast update, Seller shall provide an updated Forecast to SCE. This updated Forecast must be submitted to SCE by no later than:

(i) 5:00 a.m. PPT on the day before any day impacted by the change, if the change is known to Seller at that time. If the Web Client is not available, Seller shall e-mail these changes to presched@sce.com and immediately follow up with a phone call to SCE's Day-Ahead Scheduling Desk in accordance with Exhibit C;

(ii) Thirty (30) minutes before the commencement of any hour impacted by the change, if the change is known to Seller at that time; or

(iii) If the change is not known to Seller by the timeframes indicated in (i) or (ii) above, within twenty (20) minutes after Seller became aware or, using best efforts, should have become aware of the commencement of the event which caused the available capacity change, e-mail changes to realtime@sce.com and immediately telephone SCE's Real-time Operations Desk in accordance with Exhibit C.

(g) Forecasting Available Capacity.

If:

(i) Seller is Forecasting available capacity, in accordance with SCE's instructions;

(ii) Seller does not provide real-time communication of availability as provided in Section 3.08(g);

(iii) The telecommunications path to obtain real-time data is inoperable; or

(iv) Instrumentation is providing faulty or incorrect data; and

Seller learns of any change in the total available capacity of the Generating Facility for a period covered by the most recent Forecast update resulting from any cause, including an unplanned outage before the time that the next weekly update of the Forecast is due which Seller is required to report under the provisions of the CAISO Tariff related to PIRP/EIRP and under other applicable provisions of the CAISO Tariff related to availability and outage reporting, then Seller shall provide an updated Forecast to SCE. This updated Forecast must be submitted to SCE via the Web Client by no later than:

(1) 5:00 a.m. PPT on the day before any day impacted by the change, if the change is known to Seller at that time. If the Web Client is not available, Seller shall e-mail these changes to presched@sce.com and immediately follow up with a phone call to SCE's Day-Ahead Scheduling Desk in accordance with Exhibit C;

(2) Thirty (30) minutes before the commencement of any hour impacted by the change, if the change is known to Seller at that time; or

(3) If the change is not known to Seller by the timeframes indicated in (i) or (ii) above, within twenty (20) minutes after Seller becomes aware or, using best efforts, should have become aware of the event which caused the availability change, e-mail changes to realtime@sce.com and immediately telephone SCE's Real-time Operations Desk in accordance with Exhibit C.

(h) Seller's updated Forecast must reflect the following information:

(i) The beginning date and time of the change;

(ii) The expected ending date and time of the event;

(iii) The expected availability, in MW (if so instructed by SCE);

(iv) The expected energy, in MWh (if so instructed by SCE); and

(v) Any other information required by the CAISO as communicated to Seller by SCE.

3. SCE's Scheduling Responsibilities.

SCE shall be responsible for Scheduling the Product in accordance with this Agreement.

4. Seller's Outage Scheduling Requirements.

Seller shall meet all requirements and timelines for generation outage scheduling contained in the CAISO's Scheduled and Forced Outage Procedure T-113, or its successor, as posted on the CAISO's website.

**** End of EXHIBIT D ****

EXHIBIT E

Payments and Invoicing

1. COST RESPONSIBILITY, INVOICING AND PAYMENTS FOR STARTUP PERIOD

1.01 Cost Responsibility for Startup Period.

During the Startup Period:

(a) Seller shall be responsible for all CAISO Costs, CAISO Revenues and CAISO Sanctions, if any, and SCE will pay Seller $21.32/MWh, attributable to or assessed for energy delivered to any CAISO administered market.

(b) Seller shall comply with the Forecasting provisions set forth in Exhibit D.

(c) Seller shall make payments for SCE Penalties and CAISO Sanctions, and receive CAISO Revenues in accordance with those provisions set forth in Section 1.02 hereof and Exhibit N.

1.02 Payments and Payment Invoice for Startup Period.

(a) Payment Calculations for Startup Period.

For the purpose of enabling Seller to calculate monthly Payment Invoices, SCE, as Scheduling Coordinator, shall compile a statement of all CAISO Costs, CAISO Sanctions, CAISO Revenues and any SCE Penalties, and forward it to Seller by the later of ninety (90) days following the last day of a calendar month (for electric energy deliveries during that month) or thirty (30) days after the CAISO final settlement data is available to SCE for such deliveries.

(b) Payment Invoice and Payment for Startup Period.

No later than the 10th Business Day immediately following each calendar month in which SCE forwarded Seller settlement data for the Startup Period in accordance with subsection 1.02(a) hereof, Seller shall send a Payment Invoice to SCE. The Payment Invoice will show the sum of the CAISO Costs and CAISO Revenues that are directly assigned by the CAISO to the CAISO Resource ID(s) for the Generating Facility for the energy delivered to the Real-Time Market during the Startup Period and any CAISO Sanctions and SCE Penalties.

(i) If a Payment Invoice for any month shows an amount owed to Seller by SCE, then, on or before the later of the last Business Day of the month in which SCE receives a Payment Invoice from Seller, or the tenth (10th) Business Day after receipt of the Payment Invoice, SCE shall send to Seller, via wire transfer, SCE's payment of said amount, plus, if such payment is late, a Simple Interest Payment calculated using the Interest Rate and the number of days that such payment is

late. If SCE, in good faith, Disputes the correctness of the Payment Invoice or a portion thereof, SCE will pay only the undisputed portion of the Payment Invoice and state, in writing, the basis for the Dispute. Payment of the Disputed portion of the Payment Invoice shall not be required until the Dispute is resolved. Upon resolution of the Dispute, any required payment shall be made within two (2) Business Days of such resolution along with interest accrued at the Interest Rate from and including the due date but excluding the date paid.

(ii) If for any month during the Startup Period there is an amount owed to SCE by Seller, then Seller shall send to SCE, via wire transfer, Seller's payment of said net amount no later than the tenth (10th) Business Day after Seller sends SCE its Payment Invoice. If such payment is late, Seller shall include with its payment a Simple Interest Payment calculated using the Interest Rate and the number of days that such payment is late.

1.03 Recomputation and Payment Adjustments for Startup Period.

(a) If Seller or SCE determines that:

(i) The CAISO has recalculated CAISO Costs, CAISO Revenues or CAISO Sanctions for energy delivered to any CAISO administered market during the Startup Period; or

(ii) A calculation of Metered Amounts, CAISO Costs, CAISO Revenues, or CAISO Sanctions is incorrect as a result of inaccurate meters, the correction of data by the CAISO in OMAR, or a recalculation of CAISO Costs by the CAISO; or

(iii) SCE has recalculated an SCE Penalty in accordance with Exhibit N,

SCE or Seller shall promptly recompute the difference between the CAISO Costs, CAISO Revenues or CAISO Sanctions in the original Payment Invoice and the adjusted CAISO Costs, CAISO Revenues, or CAISO Sanctions for the period of the inaccuracy and provide Notice of such recomputation to the other Party.

(b) Any amount due from SCE to Seller, or Seller to SCE, as the case may be, will be made as an adjustment to the next monthly Payment Invoice that is calculated after the recomputation using corrected CAISO Costs, CAISO Revenues, or CAISO Sanctions or SCE Penalties, if applicable.

(c) If the recomputation results in a net amount owed to SCE after applying any amounts owing to Seller as shown on the next monthly Payment Invoice, any such additional amount owing to SCE will at SCE's discretion be netted against amounts owed to Seller in any subsequent monthly Payment Invoice, or separately invoiced to Seller, in which case Seller must pay the amount

owing to SCE no later than the 10th Business Day after receipt of the Payment Invoice.

(d) Seller or SCE must make any payment adjustments arising from a recalculation of CAISO Costs, CAISO Revenues, CAISO Sanctions, SCE Penalties, if applicable, or as a result of inaccurate meters attributable to energy deliveries during the Startup Period by no later than twelve (12) months after the end of the Startup Period.

(e) Adjustment payments for CAISO Costs, CAISO Revenues, CAISO Sanctions, or SCE Penalties, if applicable, will not bear interest.

2. COST RESPONSIBILITY, INVOICING AND PAYMENTS UPON COMMENCEMENT OF THE TERM

2.01 Cost Responsibility Upon Commercial Operation.

(a) SCE Cost Responsibility.

Upon the Commercial Operation Date and for the remainder of the Term,

(i) Except under the circumstances set forth in Section 4.01(c), SCE shall make monthly Product Payments to Seller for Product delivered to SCE calculated in the manner described in Section 2.02 below and Exhibit N;

(ii) Except as set forth in Exhibit N, SCE shall be responsible for all CAISO Costs and CAISO Sanctions and have the right to receive all CAISO Revenues;

(iii) To the extent that SCE requires Seller to participate in the PIRP/EIRP program, SCE shall be responsible for PIRP/EIRP forecasting fees.

(b) Seller Cost Responsibility.

Upon the Commercial Operation Date and for the remainder of the Term:

(i) If Seller fails to comply with the Forecasting provisions set forth in Exhibit D, Seller shall pay an SCE Penalty as set forth in Exhibit N.

(ii) Seller shall be responsible for CAISO Costs and CAISO Sanctions, under the circumstances specified in Section 4.01(c).

(iii) Seller shall make monthly Payments calculated in the manner described in Section 2.02 below and Exhibit N.

2.02 Product Payment Calculations After Commercial Operation Date.

For the purpose of calculating monthly payments for Product delivered to SCE as of the Commercial Operation Date in accordance with the terms of this Agreement ("Product Payments"), Metered Amounts will be time-differentiated according to the TOD Periods set forth in Exhibit J and the pricing will be weighted by the Product Payment Allocation Factors.

Monthly Product Payments will equal the sum of (i) the sum of the TOD Period Product Payments for all TOD Periods in the month and (ii) the Curtailed Product Payment. Each TOD Period Product Payment will be calculated pursuant to the following formula, where "n" is the TOD Period being calculated:

$$\text{TOD PERIOD}_n \text{ PRODUCT PAYMENT} = A \times B \times (C - D)$$

Where:

A = Product Price specified in Section 1.06 in $/kWh (i.e., $/MWh/1000).

B = Product Payment Allocation Factor for the TOD Period being calculated.

C = The sum of Metered Amounts in all hours for the TOD Period being calculated in kWh.

D = Any electric energy produced by the Generating Facility for which SCE is not obligated to pay Seller as set forth in Section 4.01(c).

2.03 Payment Statement and Invoices during the Term.

Upon the Commercial Operation Date and for the remainder of the Term, no later than the 10th Business Day immediately following each calendar month during the Term Year during which: (w) Metered Amounts are provided to SCE; (x) CAISO Sanctions, or any SCE Penalties are incurred by Seller; (y) there is Curtailed Product or OSGC Quantity; or (z) adjustments for payment errors are made as set forth below; Seller shall send a Payment Invoice to SCE showing:

(a) The Metered Amounts for each TOD Period during the month for which the payment is being made;

(b) The amount of Curtailed Product and OSGC Quantity, if any;

(c) A calculation of the amount payable to Seller for the month pursuant to Section 2.02 of this Exhibit E; and

(d) A calculation of the net amount due either to Seller or SCE.

2.04 Payment during the Term.

On or before the later of the last Business Day of the month in which SCE receives a Payment Invoice from Seller, or the tenth (10th) Business Day after receipt of the Payment Invoice, or, if such day is not a Business Day, then on the next Business Day, SCE shall:

(a) Send to Seller, via wire transfer, SCE's payment of said net amount, less any applicable SCE Penalties, CAISO Costs or CAISO Sanctions pursuant to Exhibit N, or other applicable charges or offsets plus, if such payment is late,

a Simple Interest Payment calculated using the Interest Rate and the number of days that such payment is late;

(b) If SCE, in good faith, Disputes the correctness of the Payment Invoice or a portion thereof, SCE will pay only the undisputed portion of the Payment Invoice and state, in writing, the basis for the Dispute. Payment of the Disputed portion of the Payment Invoice shall not be required until the Dispute is resolved. Upon resolution of the Dispute, any required payment shall be made within two (2) Business Days of such resolution along with interest accrued at the Interest Rate from and including the due date but excluding the date paid; and

(c) Provide Seller with documentation supporting any SCE Penalty, CAISO Cost or CAISO Sanction pursuant to Exhibit N, or other applicable charges and offsets which affected the net amount in the Payment Invoice.

2.05 Recomputation and Payment Adjustments.

(a) If Seller or SCE determines that a calculation of Metered Amounts, CAISO Sanctions, or SCE Penalties is incorrect as a result of inaccurate meters, the correction of data by the CAISO in OMAR, or a recalculation of CAISO Sanctions or other amounts owing between the Parties, Seller or SCE, as the case may be, shall promptly recompute the Metered Amounts, CAISO Sanctions, SCE Penalties or other amounts for the period of the inaccuracy based upon an adjustment of inaccurate meter readings, correction of data or recalculation of CAISO Sanctions in accordance with the CAISO Tariff and any payment affected by the adjustment or correction.

(b) Adjustment of Payment.

Any amount due from SCE to Seller, or Seller to SCE, as the case may be, will be made as an adjustment to the next monthly payment statement that is calculated after Seller's or SCE's recomputation using corrected measurements.

If the recomputation results in a net amount owed to SCE after applying any amounts owing to Seller as shown on the next monthly payment statement, any such amount owing to SCE will at SCE's discretion be netted against amounts owed to Seller in any subsequent monthly Payment Invoice or separately invoiced to Seller, in which case Seller must pay the amount owing to SCE within twenty (20) days after receipt of that invoice.

SCE may make payment adjustments arising from a recalculation of CAISO Costs, CAISO Sanctions, SCE Penalties, or as a result of inaccurate meters after the end of the Term Year, *provided*, the Parties will be deemed to have waived any such payment adjustments which are not communicated as provided in this Section 2.05 of this Exhibit E within twelve (12) months after

the end of the month in which the payment statement was issued containing the error. Adjustment payments for meter inaccuracy will not bear interest.

2.06 Netting Rights.

SCE reserves the right to net amounts that would otherwise be due to Seller under this Agreement in payment of any amounts:

(a) Owing and unpaid by Seller to SCE under this Agreement; or

(b) Owed to SCE by Seller arising out of, or related to, any other SCE agreement, tariff, obligation or liability.

Nothing in this Section 2.06 of this Exhibit E limits SCE's rights under applicable tariffs, other agreements or Applicable Law.

3. PAYMENT ERRORS

3.01 Notice of Error in Payment.

Except as provided in Sections 1.03 and 2.05 of this Exhibit E, if within forty-five (45) days after receipt of SCE's Payment, Seller does not give SCE Notice of an error in the payment amount, then Seller will be deemed to have waived any error in the payment.

3.02 Reimbursement for Underpayments and Overpayments.

If Seller identifies a payment error in Seller's favor and SCE agrees that the identified error occurred, SCE shall reimburse Seller for the amount of the underpayment caused by the error and apply the additional payment to the next monthly Payment Invoice that is calculated.

If Seller identifies a payment error in SCE's favor and SCE agrees that the identified error occurred, SCE may net the amount of overpayment caused by the error against amounts otherwise owed to Seller in connection with the next monthly Payment Invoice that is calculated.

3.03 Late Payments.

Late payments to Seller resulting from SCE's errors, or overpayments to Seller by SCE, will include a Simple Interest Payment calculated using the Interest Rate and the number of days between the date due (or, in the case of overpayments by SCE, commencing five (5) Business Days from the date SCE provides Notice of such overpayments to Seller) and the date paid; *provided*, changes made because of settlement, audit or other information provided by the CAISO and not available to SCE when SCE rendered its original Payment Invoice will not bear interest.

3.04 Netting after Recomputation.

If the recomputation for an error results in a net amount still owing to SCE after applying the amounts owed to SCE against any amounts owed to Seller in the payment statement, as described above, then SCE may, in its discretion, either net this

net remaining amount owed to SCE against amounts owed to Seller in any subsequent monthly Payment Invoice to Seller or invoice Seller for such amount, in which case Seller must pay the amount owing to SCE within twenty (20) days after receipt of such invoice.

3.05 Resolution of Disputes.

The Parties shall negotiate in good faith to resolve any disputes regarding claimed errors in a Payment. Any disputes which the Parties are unable to resolve through negotiation may be submitted for resolution through the mediation and arbitration as provided in Article Twelve.

**** End of EXHIBIT E ****

EXHIBIT F

Product Replacement Damage Amount

In accordance with the provisions of Section 3.07, if at the end of any Term Year, commencing with the end of the second Term Year, Seller fails to meet Seller's Energy Delivery Obligation over the Calculation Period, then Seller shall be subject to a Product Replacement Damage Amount penalty calculated as follows:

PRODUCT REPLACEMENT DAMAGE AMOUNT =

[(A – B – C) x (D – E)]

Where:

A = Seller's Energy Delivery Obligation in kWh.

B = Sum of Qualified Amounts over the Calculation Period in kWh.

C = Sum of Lost Output over the Calculation Period in kWh.

D = Simple average of the Green Market Price for all Settlement Intervals during the Calculation Period in $/kWh.

E = Product Price in $/kWh (i.e., $/MWh/1000).

In no event will SCE pay a Product Replacement Damage Amount.

**** End of EXHIBIT F ****

EXHIBIT G

Seller's Milestone Schedule and Material Permits

Seller's Milestone Schedule

No.	*Date*	*Milestones*
1	8-16-10	Submits interconnection application.
2	7-29-11	Files any land applications.
3	Sept-2013	Files Construction Permit application(s).
4	2-28-11	Files a CEC Pre-Certification application.
5	7-29-11	Files Material Permit applications.
6	n/a	Receives a completed System Impact Study or Phase I Interconnection Study.
7	8-3-10	Obtains control of all lands and rights-of-way comprising the Site.
8	10-15/11 (Revised)	Receives a completed interconnection Facility Study or Phase II Interconnection Study.
9	3-21-12	Executes an interconnection agreement and a transmission/distribution service agreement, as applicable.
10	3-21-12	Receives FERC acceptance of interconnection agreement and transmission agreement.
11	Dec-2013	Receives Construction Permit.
12	11-9-11	Receives Material Permits.
13	3-3-11	Receives CEC Pre-Certification.
14	Feb-2014	Executes an Engineering, Procurement and Construction ("EPC") contract.
15	Feb-2014	Procures the modules, inverters, etc for the Generating Facility.
16	Jan-2014	Completes financing, including construction financing.
17	July 2014	Begins construction of the Generating Facility.
18	1-15-15	Begins startup activities.
19	3-1-15	Initial Synchronization Date.
20	4-15-15	Commercial Operation Date.
21	4-15-15	Demonstrates the Contract Capacity.
22	5-15-15	Receives CEC Certification.

Seller's Material Permits

No.	*Permits*
1	Madera County, CUP #2011-009, "Adera Solar, LLC" NOD: 11-9-12
2	
3	
4	
5	
6	
7	
8	
9	
10	
11	
12	
13	
14	
15	

**** End of EXHIBIT G ****

EXHIBIT H

Milestone Progress Reporting Form

Seller shall prepare a written report each month on its progress relative to the development construction and startup of the Generating Facility and the Milestone Schedule. The report must be sent via e-mail in the form of a single Adobe Acrobat file or facsimile to SCE's Contract Administrator, as noted in Exhibit C, on the fifth (5th) Business Day after each month.

Seller's obligation to complete a Milestone Progress Reporting Form for the preceding month and submit such report to SCE begins on the first day of the first full calendar month after the Effective Date of this Agreement and ends immediately after a Milestone Progress Reporting Form is completed and submitted for the month following the month in which Seller demonstrates the Contract Capacity in accordance with Exhibit K.

Each Milestone Progress Report must include the following items:

1. Cover page.
2. Brief Generating Facility description.
3. Site plan of the Generation Facility.
4. Description of any planned changes to the Generating Facility and Site Description in Exhibit B.
5. Bar chart schedule showing progress on achieving the Milestone Schedule.
6. PERT or GANT chart showing critical path schedule of major items and activities.
7. Summary of activities during the previous month.
8. Forecast of activities scheduled for the current month.
9. Written description about the progress relative to Seller's Milestone Schedule.
10. List of issues that could potentially impact Seller's Milestone Schedule.
11. Enumeration and schedule of any support or actions requested of SCE.
12. Progress and schedule of all agreements, contracts, Permits, approvals, technical studies, financing agreements and major equipment purchase orders showing the start dates, completion dates, and completion percentages.
13. A status report of start-up activities including a forecast of activities ongoing and after start-up, a report on Generating Facility performance including performance projections for the next twelve (12) months.
14. Pictures, in sufficient quantity and of appropriate detail, in order to document construction and startup progress of the Generating Facility, Transmission Provider's electric system and all other interconnection utility services.

**** End of EXHIBIT H ****

The contents of this document are subject to restrictions on disclosure as set forth herein.

EXHIBIT I

Non-Disclosure Agreement

NON-DISCLOSURE AGREEMENT

Between

SOUTHERN CALIFORNIA EDISON COMPANY

and

Adera Solar, LLC

This Non-Disclosure Agreement ("Agreement") dated as of September 30, 2013 ("Effective Date") is hereby entered into by and between **SOUTHERN CALIFORNIA EDISON COMPANY** ("SCE"), a California corporation, and **Adera Solar, LLC** a Delaware limited liability company ("Seller").

SCE and Seller shall sometimes be referred to in this Agreement individually as a "Party" and jointly as the "Parties."

RECITALS

A. SCE initiated its Fourth Renewable Auction Mechanism Request for Offers ("RAM 4 RFO") to supply energy and associated Green Attributes, Capacity Attributes and Resource Adequacy Benefits from eligible renewable resources ("ERRs") on May 16, 2013, with a goal of negotiating and executing power purchase agreements with ERRs whose offers ("Offers") are selected pursuant to the RAM 4 RFO.

B. Seller desires to submit an Offer in response to the RAM 4 RFO.

C. The Parties desire to keep confidential any confidential or proprietary information disclosed by Seller to SCE as part of Seller's submission of an Offer in response to the RAM 4 RFO (the "Offer"), or any confidential or proprietary information that may be disclosed by either Party to the other Party as part of discussions with Seller concerning Seller's Offer until the latest of: (1) the Offer is selected by SCE and an updated non-disclosure agreement is executed between the Parties; (2) if the Offer is selected by SCE, Seller's notification to SCE that Seller declines to pursue execution of a RAM 4 RFO Renewable Power Purchase and Sale Agreement ("RAM PPA"); or (3) SCE's notification to Seller that the Offer has not been selected by SCE and SCE does not wish to pursue execution of a RAM PPA.

AGREEMENT

NOW, THEREFORE, the Parties agree as follows:

1. For purposes of this Agreement, all oral or written (including electronic) communications exchanged between the Parties on or after the Effective Date as part of, or arising out of, the Offer (including the fact that Seller has submitted the Offer and, if applicable, the facts that: (i) SCE has selected the Offer; and (ii) the Parties are pursuing execution of a RAM PPA) shall be referred to as "Confidential Information."

2. Each Party agrees to treat Confidential Information as confidential with respect to third parties and shall not disclose Confidential Information except as specifically authorized herein or as specifically agreed to by each Party in writing.

   Accordingly, each Party must take all necessary precautions and implement all requisite procedures and practices to protect Confidential Information provided by the other Party. Each Party may disclose Confidential Information only to its employees, directors, advisors, attorneys, consultants or accountants who have a strict need to know solely for the purpose of directly assisting such disclosing Party in evaluating the Offer ("Permitted Disclosee"), or in subsequent discussions or negotiations regarding the Offer and so long as such disclosing Party advises each Permitted Disclosee of the confidential nature of the Confidential Information and uses reasonable efforts to prevent or limit the disclosure of Confidential Information by such Permitted Disclosee. In addition, the Independent Evaluator (as described in SCE's RAM 4 RFO Participation Instructions) is and must be deemed to be a Permitted Disclosee.

   Each Party may also disclose Confidential Information to representatives of its rating agencies who have a strict need to know solely for the purpose of directly assisting such disclosing Party in evaluating the Offer, so long as such disclosing Party advises the rating agency of the confidential nature of the Confidential Information and uses reasonable efforts to prevent or limit the disclosure of Confidential Information by any such rating agency.

3. SCE and the Independent Evaluator may also disclose Confidential Information to the following entities and their staff and divisions thereof in furtherance of the RAM 4 RFO: (i) the California Public Utilities Commission ("CPUC"), (ii) the Procurement Review Group established pursuant to D.02-08-071 and D.03-06-071 ("PRG"), (iii) the California Energy Commission ("CEC"), and (iv) the California Independent System Operator ("CAISO").

   Although SCE will seek confidential treatment of any Confidential Information submitted by it to the CPUC, by means of a motion for protective order under Public Utilities Code section 583 and General Order 66-C, or by appropriate application to or agreement with, the PRG, CAISO and CEC, SCE may disclose Confidential

Information under this Paragraph even if no protective order is issued and no confidentiality or non-disclosure agreements are entered into.

Neither SCE nor the Independent Evaluator shall have any liability whatsoever to any party in the event of any unauthorized use or disclosure by a governmental or regulatory agency or entity, including, without limitation, the CPUC and all divisions thereof, CEC, FERC, PRG or CAISO, of any Confidential Information or other information disclosed to any of them by SCE or its representatives.

4. Notwithstanding anything to the contrary set forth herein, the obligations set forth in this Agreement shall not apply to and the term "Confidential Information" shall not include:

   a. Information which is in the public domain as of the Effective Date or which later comes into the public domain from a source other than the receiving Party, its Permitted Disclosee or representatives of its rating agencies;

   b. Information which the receiving Party can demonstrate in writing was already known to the receiving Party prior to the Effective Date;

   c. Information which comes to the receiving Party from a *bona fide* third party source not under an obligation of confidentiality; or

   d. Information which is independently developed by the receiving Party without use of or reference to Confidential Information or information containing Confidential Information.

5. The Parties agree that irreparable damage would occur if this Agreement were not performed in accordance with its terms or were otherwise breached. Accordingly, a Party may be entitled to seek an injunction or injunctions to prevent breach of this Agreement and to enforce specifically its provisions in any court of competent jurisdiction, in addition to any other remedy to which such Party may be entitled by law or equity.

6. The Parties agree not to introduce (in whole or in part) into evidence or otherwise voluntarily disclose in any administrative or judicial proceeding, any Confidential Information**,** except as required by law, legal compulsion, or with the written consent of the Party providing the Confidential Information or as SCE or Seller may be required to disclose to duly authorized governmental or regulatory agencies, including the CPUC or any division thereof, in order to demonstrate the reasonableness of its actions.

7. All written Confidential Information supplied by a Party, and all copies or translations thereof made by the Party or Permitted Disclosee who received the Confidential Information, shall, upon written request of the Party who initially

provided the Confidential Information, be returned to that Party, destroyed, or held and maintained subject to the terms of this Agreement *provided, however,* that a Party or Permitted Disclosee shall not be obligated to return or destroy any Confidential Information contained in its archive computer back-up system and *provided further, that* a Party may retain copies of Confidential Information to the extent that retention is required by applicable law or regulation.

8. Nothing in this Agreement is intended to waive any attorney-client, work-product or other privilege applicable to any statement, document, communication, or other material of a Party or the Parties.

9. Any notice or communication given pursuant to this Agreement shall be in writing and:

   a) Delivered personally, in which case delivery is given upon written acknowledgment of receipt;

   b) Mailed by registered or certified mail; postage prepaid, in which case delivery is given on the earlier of the actual date of delivery, as set forth in the return receipt, or three (3) days from the date posted, or

   c) Delivery by facsimile, in which case delivery is given upon actual receipt of the entire document.

   In any of these cases, the writing shall be sent or delivered as follows (subject to change by either Party by notifying the other Party pursuant to this paragraph).

If to SCE: Southern California Edison Company
2244 Walnut Grove Avenue
Rosemead, California 91770
Attention: Vice President, Energy Contracts
Telephone: (626) 302-1212
Facsimile: (626) 302-1103

If to Seller: Adera Solar, LLC
115 West Canon Perdido Street
Santa Barbara, CA 93101
Attention: David Saul, CEO, Pacific Valley, LLC
Telephone: 702-289-4361
Facsimile: 805-284-9025

10. This Agreement shall be effective as of the Effective Date and shall terminate five (5) years from the Effective Date, or earlier upon the mutual written consent of the Parties or as required by applicable law or decision of the CPUC.

11. This Agreement shall be interpreted in accordance with the plain meaning of its terms and not strictly for or against any of the Parties hereto.

    This Agreement shall be construed as if each Party was its author and each Party hereby adopts the language of this Agreement as if it were its own.

12. Any waiver of the requirements and provisions of this Agreement shall be in writing. The failure of either Party to enforce at any time any of the provisions of the Agreement or to require at any time performance by the other Party of any of such provisions, shall in no way be construed as a waiver of such provision or a relinquishment of the right thereafter to enforce such provision.

13. This Agreement may not be modified except by a written agreement executed by both Parties.

14. This Agreement shall be interpreted, governed and construed under the laws of the State of California (without giving effect to its conflict of laws provisions that could apply to the law of another jurisdiction) as if executed in and to be wholly performed within the State of California.

15. This Agreement fully expresses the Parties' agreement concerning the subject matter hereof and supersedes any prior agreements or understandings regarding the same subject matter.

16. The signatories hereto represent that they have been duly authorized to enter into this Agreement on behalf of the Party for whom they sign.

17. If any provision hereof is unenforceable or invalid, it shall be given effect to the extent it may be enforceable or valid, and such enforceability or invalidity shall not affect the enforceability or invalidity of any other provision of this Agreement.

18. This Agreement may be executed in one or more counterparts, each of which will be deemed to be an original of this Agreement and all of which, when taken together, will be deemed to constitute one and the same agreement. The exchange of copies of this Agreement and of signature pages by facsimile transmission or by other electronic means shall constitute effective execution and delivery of this Agreement as to the Parties and may be used in lieu of the original Agreement for all purposes. Signatures of the parties transmitted by facsimile or by other electronic means shall be deemed to be their original signatures for all purposes.

ADERA SOLAR, LLC a Delaware limited liability company	**SOUTHERN CALIFORNIA EDISON COMPANY,** a California corporation.
By: Name: DAN FIRESTONE Title: BOARD MEMBER / AUTHORIZED SIGNATORY	**By:** Name: Steven D. Eisenberg Title: Vice President, Energy Contracts
Date: 9-20-13	Date: 9-30-13

**** End of EXHIBIT I****

EXHIBIT J

Time of Delivery Periods
and
Product Payment Allocation Factors

Time of Delivery Periods ("TOD Periods")			
TOD Period	*Summer* *Jun 1st – Sep 30th*	*Winter* *Oct 1st – May 31st*	*Applicable Days*
On-Peak	Noon – 6:00 p.m.	Not Applicable.	Weekdays except Holidays.
Mid-Peak	8:00 a.m. – Noon	8:00 a.m. - 9:00 p.m.	Weekdays except Holidays.
	6:00 p.m. – 11:00 p.m.		Weekdays except Holidays.
Off-Peak	11:00 p.m. – 8:00 a.m.	6:00 a.m. – 8:00 a.m.	Weekdays except Holidays.
		9:00 p.m. – Midnight	Weekdays except Holidays.
	Midnight – Midnight	6:00 a.m. – Midnight	Weekends and Holidays
Super-Off-Peak	Not Applicable.	Midnight – 6:00 a.m.	Weekdays, Weekends and Holidays

Product Payment Allocation Factors			
Season	*TOD Period*	*Calculation Method*	*Product Payment Allocation Factor*
Summer	On-Peak	Fixed Value.	1.11
	Mid-Peak	Fixed Value.	1.13
	Off-Peak	Fixed Value.	0.96
Winter	Mid-Peak	Fixed Value.	1.02
	Off-Peak	Fixed Value.	1.00
	Super-Off-Peak	Fixed Value.	0.92

"Holiday" is defined as New Year's Day, Presidents' Day, Memorial Day, Independence Day, Labor Day, Veterans Day, Thanksgiving Day, and Christmas Day.

When any Holiday falls on a Sunday, the following Monday will be recognized as a Holiday. No change will be made for Holidays falling on Saturday.

**** End of EXHIBIT J ****

EXHIBIT K

Procedure for Demonstration of Contract Capacity and Partial or Full Return of Development Security

1. Seller's Notice of Demonstration Date.

   Seller shall provide at least thirty (30) days prior Notice to SCE of the date selected by Seller ("Demonstration Date"), which Demonstration Date shall be no later than thirty (30) days following the Commercial Operation Date, during which Seller intends to demonstrate the Contract Capacity. Upon SCE's request, Seller shall make reasonable efforts to reschedule the Demonstration Date.

2. Demonstration of Contract Capacity.

   SCE shall complete a site visit on the Demonstration Date to verify that the Generating Facility was developed in accordance with the Generating Facility and Site Description set forth in Exhibit B and to determine the Demonstrated Contract Capacity and Installed DC Rating.

3. Full or Partial Return of Development Security for Demonstrating Contract Capacity.

   Unless SCE provides timely Notice to Seller that additional days are required to substantiate data, SCE shall within ten (10) Business Days after SCE's site visit pursuant to Section 2 of this Exhibit K:

   (a) Calculate the amount of Development Security refund due Seller pursuant to Sections 3.06(e) and 3.06(f), as follows:

      (i) If the Demonstrated Contract Capacity as determined in Section 2 above is greater than or equal to the Contract Capacity set forth in Section 1.01(h) *then* Seller will qualify to receive a full return of the Development Security;

      (ii) If the Demonstrated Contract Capacity as determined in Section 2 above is less than the Contract Capacity set forth in Section 1.01(h) *then* Seller will qualify to receive a return of only a portion of the Development Security based upon the level of the Demonstrated Contract Capacity;

   (b) Provide Notice to Seller of (i) the amount of the Demonstrated Contract Capacity, and (ii) the amount of Development Security being returned pursuant to this Section 3;

   (c) Return any Development Security due Seller if such Development Security were posted in the form of cash; and

   (d) Return the Letter of Credit to the issuing bank if the total amount of the posted Development Security is due Seller. If Seller is only entitled to a partial return of the Development Security SCE shall submit a drawing certificate on

the Letter of Credit for the amount of Development Security forfeited by Seller, after which SCE shall release the remaining balance of the Letter of Credit.

To the extent Seller has posted Development Security in accordance with Section 3.06 and Seller is entitled to a partial return of the Development Security, SCE shall return only a portion of the Development Security based upon the level of the Demonstrated Contract Capacity.

**** End of EXHIBIT K ****

EXHIBIT L

Seller's Estimate of Lost Output

Lost Output, as used in Section 3.23, shall be estimated by Seller in accordance with the procedures described in this Exhibit L.

Seller shall (1) collect the measurement data and perform the engineering calculations specified below in one (1) or more Microsoft Excel Workbooks (the "Lost Output Workbook") provided in a form and naming convention approved by SCE and (2) electronically send the Lost Output Workbook to an address provided by SCE.

SCE shall have the right to verify all data by inspecting measurement instruments and reviewing Generating Facility Operating records.

Seller shall update the Lost Output Workbook each month and shall include the latest revision of the Lost Output Workbook with its monthly Lost Output Report.

1. Log of Lost Output Events.

   The log of Lost Output Events must be created on a single, dedicated worksheet that is arranged with:

   (a) One (1) column for a unique Lost Output Event number;

   (b) One (1) column for the Term Year number;

   (c) One (1) column for the start date;

   (d) One (1) column for the start time;

   (e) One (1) column for the end date;

   (f) One (1) column for the end time;

   (g) One (1) column for the duration;

   (h) One (1) column for the cause;

   (i) One (1) column for the total of Metered Amounts during all of the Settlement Intervals of the Lost Output Event, recorded as set forth in Item 4(i) in this Exhibit L;

   (j) One (1) column for the total of the Lost Output *preliminary* results during all of the Settlement Intervals of the Lost Output Event, calculated as set forth in Item 4(m) in this Exhibit L;

   (k) One (1) column for the total of the Lost Output *final* results during all of the Settlement Intervals of the Lost Output Event, calculated as set forth in Item 4(n) in this Exhibit L; and

   (l) One (1) row for each Lost Output Event.

2. Generating Facility Energy Yield Curve.

Seller shall create a Generating Facility Energy Yield Curve table on a single dedicated worksheet that is arranged with:

(a) One (1) column for an item number;

(b) One (1) column for the plane of array insolation;

(c) One (1) column for the manufacturer's estimate of the electric energy that can be produced by a single Inverter Block Unit at each increment of plane of array insolation;

(d) Multiple columns for a energy yield curve which estimates the electric energy that could be produced by the entire Generating Facility at each plane of array insolation increment and number of in service Inverter Block Units calculated by:

(i) *Multiplying* the Inverter Block Unit manufacturer's estimate of the electric energy that will be produced by a single unit, set forth in Item 2(c);

(ii) *Times* the total number of in service Inverter Block Units; and then

(iii) *Adjusting* the results for the estimated impacts of one (1) Inverter Block Unit on another and for electric losses within the Generating Facility;

(e) Multiple columns for each Term Year energy yield curve which includes a simple average of all Metered Amount data points, set forth in Item 3(f), at each plane of array insolation increment and number of in service Inverter Block Units; and

(f) One (1) row for each watt-hour per square meter of plane of array insolation.

Seller shall also create a single chart which plots all of energy yield curves set forth in Item 2(d) and Item 2(e) of this Exhibit L on the Generating Facility Energy Yield Curve worksheet.

3. <u>Plane of Array Insolation Data Collection</u>.

Seller shall record Settlement Interval plane of array insolation, in watt-hours per square meter, and Metered Amounts in the Settlement Interval in the Lost Output Workbook on individual Term Year worksheets.

Each Term Year worksheet must be arranged with:

(a) One (1) column for an item number;

(b) One (1) column for the date;

(c) One (1) column for the beginning time;

(d) One (1) column for the weekday;

(e) One (1) column for each recorded plane of array insolation measurement;

(f) One (1) column for each Metered Amounts quantity;

(g) One (1) column for a forecast of Metered Amounts determined by:

(i) *Multiplying* the recorded plane of array insolation measurement set forth in Item 3(e) of this Exhibit L;

(ii) *Times* the appropriate value in the Generating Facility Energy Yield Curve, set forth in Item 2(e) of this Exhibit L, for the first Term Year;

(h) One (1) column for the number of Inverter Blocks in service; and

(i) One (1) row for each Settlement Interval period.

4. Detailed Estimate of Lost Output.

Seller's detailed estimate of the Lost Output amounts during the Term shall be presented on a single worksheet organized as follows:

(a) One column for an item number;

(b) One (1) column for the Lost Output Event number;

(c) One (1) column for the state date;

(d) One (1) column for the start time;

(e) One (1) column for the end date;

(f) One (1) column for the end time;

(g) One (1) column for the weekday;

(h) One (1) column for the plane of array insolation;

(i) One (1) column for Metered Amounts;

(j) One (1) column for the number of Inverter Block Units in service.

(k) One (1) column for a *preliminary* estimate of the Metered Amounts that would have been produced by the Generating Facility, but for the Lost Output Event:

(i) *Multiplying* the plane of array insolation:

(ii) *Times* the appropriate initial energy yield curve as follows:

(1) For the first eleven (11) months of the first Term Year the appropriate initial energy yield curve must be the energy yield curve set forth in Item 2(d) of this Exhibit L;

(2) For the first eleven (11) months of any Term Year, other than the first Term Year, the appropriate initial energy yield curve must be the energy yield curve set forth in Item 2(e) of this Exhibit L for the previous Term Year;

(l) One (1) column for a *final* estimate of the Metered Amounts that would have been produced by the Generating facility, but for the Lost Output Event calculated by:

(i) *Multiplying* the plane of array insolation;

(ii) *Times* the *final energy yield curve* from Item 2(e) of this Exhibit L for the Term Year being calculated;

(m) One (1) column for the *preliminary* estimate of Lost Output calculated by:

(i) *Subtracting* the actual Metered Amount quantities set forth in Item 4(i) of this Exhibit L;

(ii) *From* the preliminary estimate of the Metered Amounts that would have been produced by the Generating Facility, but for the Lost Output Event, calculated in Item 4(k); and

(n) One (1) column for the *final* estimate of Lost Output calculated by

(i) *Subtracting* the actual Metered Amount quantities set forth in Item 4(i) of this Exhibit L;

(ii) *From* the estimate of Metered Amounts that would have been produced by the Generating Facility, but for the Lost Output Event, calculated in Item 4(l) of this Exhibit L; and

(o) One (1) row for each Settlement Interval.

5. Generating Facility Performance Factor Calculation.

Seller shall calculate a Generating Facility Performance Factor value for each calendar month and each Term Year on a dedicated worksheet organized with three tables.

(a) The first table must contain the monthly Metered Amount totals and must consist of:

(i) One (1) column for the month number;

(ii) One (1) column for the month name;

(iii) One (1) column for the year number;

(iv) One (1) column for the monthly Metered Amount totals for each Term Year from the plane of array insolation data collection worksheet column set forth in Item 3(f) of this Exhibit L; and

(v) One (1) row for each month;

(b) The second table must contain the monthly totals of forecasted Metered Amount and must consist of:

(i) One (1) column for the month number;

(ii) One (1) column for the month name;

(iii) One (1) column for the year number;

(iv) One (1) column for the monthly totals of forecasted Metered Amount for each Term Year from the plane of array insolation data collection worksheet column set forth in Item 3(g) of this Exhibit L; and

(v) One (1) row for each month; and

(c) The third table must contain monthly Performance Factors and must consist of:

(i) One (1) column for the month number;

(ii) One (1) column for the month name;

(iii) One (1) column for the year number;

(iv) One (1) column for a monthly Generating Facility Performance Factor result and a Term Year Generating Facility Performance Factor results calculated by:

(1) *Dividing* the appropriate value in the first table;

(2) *By* the appropriate value in the second table;

(v) One (1) row for each month; and

(vi) One (1) row for the Term Year Generating Facility Performance Factor results.

6. Periodic Review of Lost Output Calculation.

At least once per Term Year, SCE shall review the variation in the Lost Output preliminary and final results to determine if other variables, including temperature, precipitation, solar altitude or azimuth angles or other parameters measured pursuant to Exhibit P, should be incorporated into the Lost Output calculations.

7. Assignment of Lost Output Estimate to an Independent Consultant.

The Parties can by mutual agreement elect to have the estimate of Lost Output prepared by an independent consultant.

**** End of EXHIBIT L ****

EXHIBIT M

Form of Letter of Credit

IRREVOCABLE NONTRANSFERABLE STANDBY

LETTER OF CREDIT

Reference Number:

Transaction Date:

BENEFICIARY:

Southern California Edison Company

2244 Walnut Grove Avenue

Risk Control GO#1, Quad 1D

Rosemead, CA 91770

Ladies and Gentlemen:

_____ (the "Bank") hereby establishes this Irrevocable Nontransferable Standby Letter of Credit ("Letter of Credit") in favor of Southern California Edison Company, a California corporation (the "Beneficiary"), for the account of _____, a _____ corporation, also known as RAP ID# ___ (the "Applicant"), for the amount of XXX AND XX/100 Dollars ($_____) (the "Available Amount"), effective immediately and expiring at 5:00 p.m., California time, on _____ (the "Expiration Date").

This Letter of Credit shall be of no further force or effect upon the close of business on the Expiration Date or, if such day is not a Business Day (as hereinafter defined), on the next Business Day.

For the purposes hereof, "Business Day" shall mean any day on which commercial banks are not authorized or required to close in Los Angeles, California.

Subject to the terms and conditions herein, funds under this Letter of Credit are available to Beneficiary by presentation in compliance on or before 5:00 p.m. California time, on or before the Expiration Date of the following:

1. The original or a photocopy of this Letter of Credit and all amendments; and

2. The Drawing Certificate issued in the form of Attachment A attached hereto and which forms an integral part hereof, duly completed and purportedly bearing the signature of an authorized representative of the Beneficiary.

Notwithstanding the foregoing, any full or partial drawing hereunder may be requested by transmitting the requisite documents as described above to the Bank by facsimile at _____ or such other number as specified from time-to-time by the Bank.

The facsimile transmittal shall be deemed delivered when received. Drawings made by facsimile transmittal are deemed to be the operative instrument without the need of originally signed documents.

Partial drawing of funds shall be permitted under this Letter of Credit, and this Letter of Credit shall remain in full force and effect with respect to any continuing balance; *provided*, the Available Amount shall be reduced by the amount of each such drawing.

This Letter of Credit is not transferable or assignable. Any purported transfer or assignment shall be void and of no force or effect.

Banking charges shall be the sole responsibility of the Applicant.

This Letter of Credit sets forth in full our obligations and such obligations shall not in any way be modified, amended, amplified or limited by reference to any documents, instruments or agreements referred to herein, except only the attachment referred to herein; and any such reference shall not be deemed to incorporate by reference any document, instrument or agreement except for such attachment.

The Bank engages with the Beneficiary that Beneficiary's drafts drawn under and in compliance with the terms of this Letter of Credit will be duly honored if presented to the Bank on or before the Expiration Date.

Except so far as otherwise stated, this Letter of Credit is subject to the International Standby Practices ISP98 (also known as ICC Publication No. 590), or revision currently in effect (the "ISP"). As to matters not covered by the ISP, the laws of the State of California, without regard to the principles of conflicts of laws thereunder, shall govern all matters with respect to this Letter of Credit.

AUTHORIZED SIGNATURE for Issuer

_____

(Name)

Title: _____

ATTACHMENT A
Drawing Certificate

TO *[ISSUING BANK NAME]*

IRREVOCABLE NON-TRANSFERABLE STANDBY LETTER OF CREDIT

No. _____

DRAWING CERTIFICATE

Bank

Bank Address

Subject: Irrevocable Non-transferable Standby Letter of Credit

Reference Number:_____

The undersigned _____, an authorized representative of Southern California Edison Company (the "Beneficiary"), hereby certifies to *[Issuing Bank Name]* (the "Bank"), and _____ (the "Applicant"), with reference to Irrevocable Nontransferable Standby Letter of Credit No. {_____}, dated _____ _____, (the "Letter of Credit"), issued by the Bank in favor of the Beneficiary, as follows as of the date hereof:

1. The Beneficiary is entitled to draw under the Letter of Credit an amount equal to $_____, for the following reason(s) [check applicable provision]:

   [ ]A. An Event of Default, as defined in that certain Renewable Power Purchase and Sale Agreement between Applicant and Beneficiary, dated as of *[Date of Execution]* (the "Agreement"), with respect to the Applicant has occurred and is continuing.

   [ ]B. An Early Termination Date (as defined in the Agreement) has occurred or been designated as a result of an Event of Default (as defined in the Agreement) with respect to the Applicant for which there exist any unsatisfied payment obligations.

   [ ]C. The Letter of Credit will expire in fewer than twenty (20) Local Business Days (as defined in the Agreement) from the date hereof, and Applicant has

not provided Beneficiary alternative Development Security or Performance Assurance (as defined in the Agreement) acceptable to Beneficiary.

[ ]D. The Bank or Applicant has heretofore provided written notice to the Beneficiary of the Bank's or Applicant's intent not to renew the Letter of Credit following the present Expiration Date thereof, and Applicant has failed to provide the Beneficiary with a replacement letter of credit satisfactory to Beneficiary in its sole discretion within thirty (30) days following the date of the Notice of Non-Renewal.

[ ]E. The Beneficiary has not been paid any or all of the Applicant's payment obligations now due and payable under the Agreement.

[ ]F. The Beneficiary is entitled to retain the entire Development Security: (i) because Commercial Operation Date has not occurred on or before the Commercial Operation Deadline, or any extended Commercial Operation Deadline as provided in the Agreement, or for any of the reasons set forth in Section 3.06(d) of the Agreement; or (ii) because the Agreement has been terminated due to an Event of Default by Applicant before the Commercial Operation Deadline.

[ ]G. The Beneficiary is entitled to retain a portion of the Development Security equal to the product of Sixty dollars ($60) per kilowatt times the Unincluded Capacity in kilowatts as a result of Applicant demonstrating only a portion of the Contract Capacity.

2. Based upon the foregoing, the Beneficiary hereby makes demand under the Letter of Credit for payment of U.S. DOLLARS AND ____/100ths (U.S.$_____), which amount does not exceed (i) the amount set forth in paragraph 1 above, and (ii) the Available Amount under the Letter of Credit as of the date hereof.

3. Funds paid pursuant to the provisions of the Letter of Credit shall be wire transferred to the Beneficiary in accordance with the following instructions:

_____

_____

_____

Unless otherwise provided herein, capitalized terms which are used and not defined herein shall have the meaning given each such term in the Letter of Credit.

IN WITNESS WHEREOF, this Certificate has been duly executed and delivered on behalf of the Beneficiary by its authorized representative as of this ____ day of _____, _____.

Beneficiary: SOUTHERN CALIFORNIA EDISON COMPANY

By:

Name:

Title:

**** End of EXHIBIT M ****

EXHIBIT N

SCE Penalties and CAISO Sanctions

Seller is liable for SCE Penalties and CAISO Sanctions under the circumstances described in this Exhibit N.

1. Determining Seller's Liability for SCE Penalties.

   If in any hour of any month in the Delivery Term Seller fails to comply with its Forecasting requirements under Exhibit D of this Agreement with respect to Seller's Forecast of available capacity only, and the sum of Energy Deviations for each of the six Settlement Intervals in that hour exceed the Performance Tolerance Band described in Paragraph 2 of this Exhibit, then Seller is liable for an SCE Penalty equal to one hundred fifty percent (150%) of the Product Price in Section 1.06 for each MWh of electric energy deviation, or any portion thereof, in that hour.

2. Performance Tolerance Band.

   The "Performance Tolerance Band," in kWh, is equal to:

   (a) Three percent (3%) times

   (b) Contract Capacity times

   (c) One (1) hour, i.e., the interval of time for monitoring Forecasting requirements.

3. Seller's Liability for CAISO Sanctions.

   Seller must reimburse SCE for all CAISO Sanctions incurred by SCE as a result of Seller's failure to adhere to its obligations under the CAISO Tariff or any CAISO directive, as such directive may be communicated to Seller by SCE, or as set forth in Sections 3.14 and 4.01(c).

4. Billing and Documentation of CAISO Sanctions.

   (a) The CAISO Sanctions will be available for billing approximately one hundred twenty (120) days following the last day of the calendar month in which the event giving rise to the sanction occurs, or thirty (30) days after the CAISO final settlement data is available to SCE, whichever is sooner.

   (b) SCE shall provide to Seller the applicable back-up data used for validating CAISO Sanctions.

**** End of EXHIBIT N ****

EXHIBIT O

Actual Availability Report

Pursuant to Section 3.24, Seller shall prepare an Actual Availability Report in accordance with the procedures described in this Exhibit O.

1. Availability Workbook.

   Seller shall:

   (a) Collect the measurement data, listed in Item 2 below, in one (1) or more Microsoft Excel Workbooks (the "Availability Workbook") provided in a form and naming convention approved by SCE; and

   (b) Electronically send the Availability Workbook to an address provided by SCE.

   The Actual Availability Report must reflect the Actual Available Capacity as measured by Seller's SCADA equipment.

2. Log of Availability.

   The Availability Workbook must be created on a single, dedicated worksheet and shall be in the form of Attachment 1 to this Exhibit O.

   The data presented in the Availability Workbook must not reflect any electric energy losses between the CAISO Approved Meter or Check Meter and the Delivery Point.

ATTACHMENT 1

Actual Availability Report

(Form of Microsoft Excel File Attachment to E-mail Notice)

**** End of EXHIBIT O ****

EXHIBIT P

Meteorological Station Specifications

Pursuant to Section 3.08(f), Seller shall install and maintain a minimum of one (1) stand-alone meteorological equipment station for each one (1) square mile (or portion thereof) of the Site. Each station shall be equipped with instruments and equipment that meet or exceed those specifications set forth in the CAISO's PIRP/EIRP protocol and are compatible with the requirements of SCE. SCE and Seller acknowledge that SCE may update this Exhibit P from time to time in order to accommodate industry standards, the CAISO PIRP/EIRP protocol and the needs of SCE.

SCE and Seller shall develop the technical specifications for meteorological stations, which will meet these basic requirements.

Seller shall be required to maintain the meteorological station in accordance with Prudent Electrical Practices and equipment specifications. Seller shall perform yearly calibrations of all instruments. In addition, any solar irradiance sensor must be cleaned daily or after storm events, following manufacturers recommended cleaning procedures.

1. Equipment Stations.

   (a) The equipment stations shall be comprised of the following:

      (i) One (1) heated wind sensor;

      (ii) One (1) air temperature sensor;

      (iii) One (1) relative humidity sensor;

      (iv) One (1) barometric pressure sensor (with DCP sensor);

      (v) One (1) total global irradiation sensor for each collector plane orientation in the Site. The sensor(s) are oriented at the same inclination and aspect as the collector plane(s);

      (vi) One (1) total global radiation sensor horizontal to the ground plane (only 1 such sensor shall be required under this Agreement); and

      (vii) One (1) diffuse radiation sensor (only 1 such sensor shall be required under this Agreement).

   (b) In addition, Seller shall report:

      (i) Solar altitude angle;

      (ii) Solar azimuth angle; and

      (iii) Precipitation.

   (c) All sensors shall be set at a height location representing the height from ground level of the solar collection point, for example, two (2) meters above ground level.

3. Attributes of Equipment Station Locations.

The equipment station location(s) should be unencumbered by any shadow or equipment. The equipment station tower is to be placed in front of the solar collectors on the southern side of the Site. In addition, the station's satellite communication transmitter requires an unencumbered south-by-south west view of the sky for antenna placement.

4. Communication.

Seller shall communicate meteorological data to SCE via a system consistent with SCE's employed methods at the time of installation. The equipment installed will need to be approved by SCE.

The satellite communication requires an unencumbered south-by-southwest view of the sky for antenna placement. Weather station data will be transmitted to SCE consistent with the industry standard practices at the time of installation.

5. Equipment Requirements.

SCE currently requires equipment with quality levels, compatibility and functional specifications that meet or exceed those of the equipment set forth below in this Item 4. Any equipment different from that listed below must have the approval of SCE before installation at the Site.

(a) MAWS301 AWS System.

(i) MAWS301Basic Assembly for MAWS301 Automatic Weather Station, including following modules and functions:

- QML201 AWS Logger with 1.7 MB Flash memory for data logging
- QBR101B Battery regulator
- ENC542PLM Equipment enclosure with backup battery mounting accessories and internal wiring
- Bottom plate with signal connectors for sensors and peripheral equipment
- MAWS LIZARD Set-up software
- MAWS Terminal software

(ii) ENC542SHIELD Radiation Shield for MAWS301 enclosure

(iii) QMZ101 Terminal/maintenance cable for MAWS

(iv) QMBATT12 Back-up battery - 12 Ah/12V, installed in MAWS enclosure, includes wiring

(b) Sensors.

(i) QMT110 Air temperature sensor with 10 m cable and connector

- DTR502P22 Radiation shield for QMT110 (air temp sensor) including mounting accessories to a pole/mast (60-100 mm)

(ii) QMT103 Air temperature sensor with 5-m cable and connector

- 212417 Extension cables, 25m, shielded, 5-pin F-M connector for QMT103 sensor
- DTR502P22 Radiation shield for QMT103 (air temp sensor) including mounting accessories to a pole/mast (60-100 mm)

(iii) PMT16A Barometric pressure sensor installed within the MAWS301 enclosure

(iv) M301-WS425STDH Heated Ultrasonic Wind Sensor with RS485 & power output cable, sensor mounting on 60 mm diameter pole/mast and 36 VDC power supply

(v) HMT 100 humidity and temperature sensor

(vi) Model RSR-2, Rotating Shadowband Radiometer System from Irradiance Inc. for site global horizontal and diffuse irradiance

(vii) Kipp and Zonen Model CMP-11, thermopile pyranometer mounted in the plane of the solar array for each solar array orientation

(c) Powering.

MCP150-M3-115 Mains (AC) power supply, installed in enclosure (ENC542PLM), including wiring and surge arrestors for 115 VAC

(d) Communication.

(i) DSI485ASET48-M3 Isolated RS-485 module - 2 wire connection, including extra surge arrestors for both lines, installed in MAWS enclosure communications from logger to WS425 sensors

(ii) DME421-M3 Ethernet interface serial port to VSAT transmitter. Module mounted within MAWS enclosure

(iii) VSAT Hardware, VSAT transmitter, cables with connectors, testing of each site, antenna positioners, mounting hardware. Installation at each site should include program fee for VSAT module

(e) Install Accessories.

(i) APPK-60SET Mast mounting for MAWS enclosure on a 50-60 mm diameter pole/mast/tower

(ii) QSA124PT Surge Arrestor for QMT103/110 Temp sensor lines (4-wire)

(iii) #010411 Shielded RS485 cabling from MAWS301 to WS425STDH - 10m cables

(iv) QSA224DC Surge Arrestor for RS485 lines, wind sensors at 10m

---

**** End of EXHIBIT P ****

EXHIBIT Q

Notice of SCE's Rights

RECORDING REQUESTED BY

AND WHEN RECORDED MAIL TO:

Southern California Edison

2244 Walnut Grove Avenue
Rosemead, California 91770

Attention: SCE Law Department, Manager of Power Procurement Section

APN: _____

(Space Above for Recorder's Use Only)

NOTICE OF SCE's RIGHTS

NOTICE IS HEREBY GIVEN THAT SOUTHERN CALIFORNIA EDISON COMPANY, a California corporation ("SCE"), and **ADERA SOLAR, LLC,** a Delaware limited liability company ("Seller"), have entered into that Renewable Power Purchase and Sale Agreement dated as of _____ (as amended, supplemented and revised from time to time, the "Agreement"). Pursuant to the Agreement, SCE has the right to purchase all electric energy, Green Attributes, Capacity Attributes and Resource Adequacy Benefits (as such terms are defined in the Agreement) associated with or attributable to any generating facilities located or to be located on that certain real property (the "Property") more

particularly described on Attachment A attached hereto and incorporated herein by the reference.

SCE's rights shall terminate as set forth in the Agreement, but not later than ____. This Notice shall terminate automatically on ____, unless earlier terminated by SCE by recording a notice of termination.

Reference is made to the Agreement for the terms and conditions of SCE's rights. In the event of a conflict between the terms of this Notice and the terms of the Agreement, the terms of the Agreement shall control.

[Signatures are on the following page]

ADERA SOLAR, LLC,

a Delaware limited liability company.

By: _____
Its:

Date: _____

By: _____
Its:

Date: _____

SOUTHERN CALIFORNIA EDISON COMPANY,

a California corporation.

By: _____

Vice President of
Renewable and Alternative Power

Date: _____

ATTACHMENT A

[Legal Description of Property]

ACKNOWLEDGMENT

STATE OF CALIFORNIA)

)

COUNTY OF LOS ANGELES)

On _____ 20____, before me, _____, Notary Public, personally appeared _____,who proved to me on the basis of satisfactory evidence to be the person(s) whose name(s) is/are subscribed to the within instrument and acknowledged to me that he/she/they executed the same in his/her/their authorized capacity(ies), and that by his/her/their signature(s) on the instrument, the person(s), or the entity upon behalf of which the person(s) acted, executed the instrument.

I certify under PENALTY OF PERJURY under the laws of the State of California that the foregoing paragraph is true and correct.

WITNESS my hand and official seal.

_____

[SEAL]

**** End of EXHIBIT Q ****